USER MANUAL

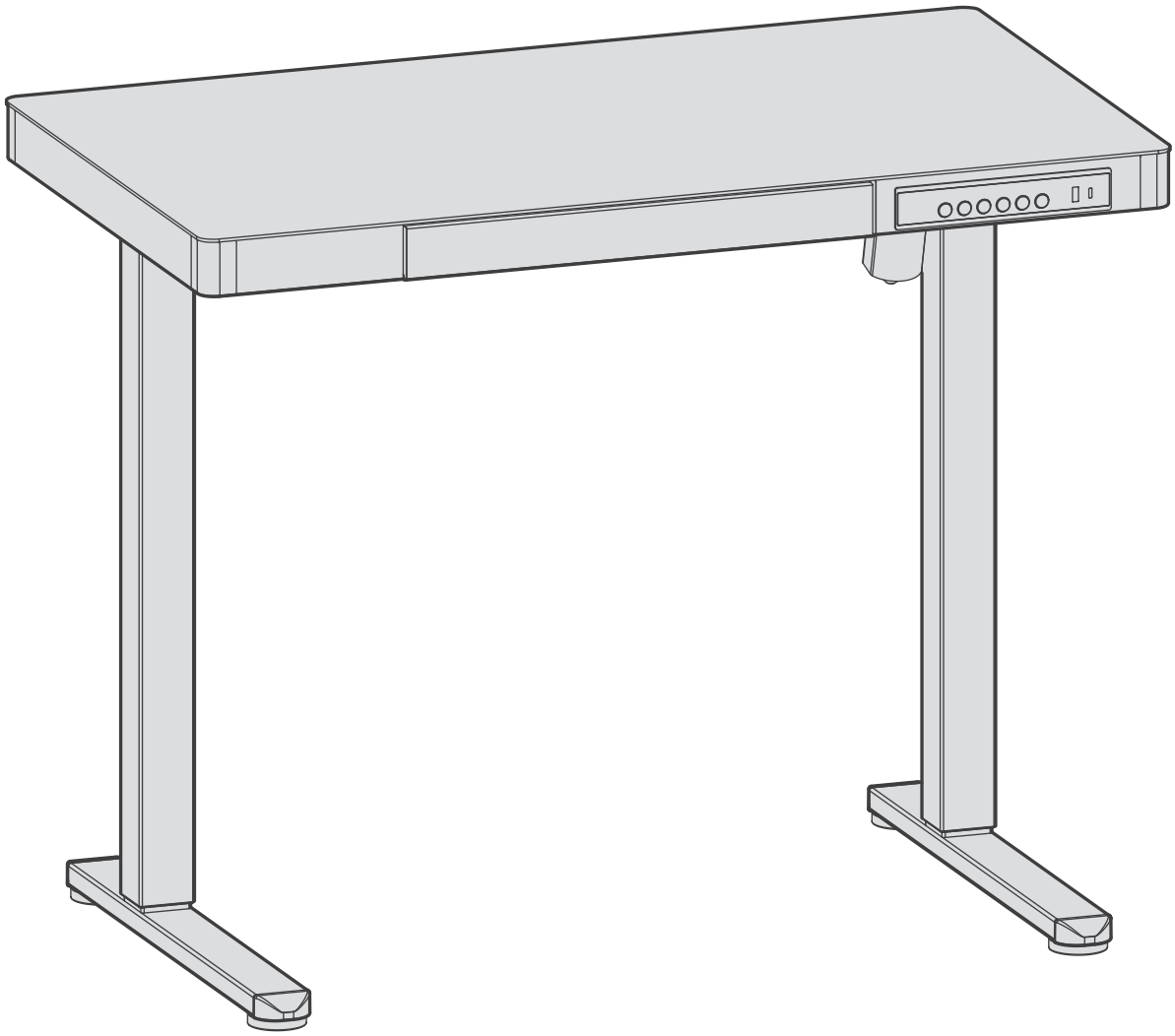

Scan QR code for installation video

support@yfs.life

yfs.life/aae

⚠ Warning



Keep children and pets away from the desk during use.
They can't judge the danger. Hands or hair can be caught in moving parts or crushed, causing serious injury.



Keep the desktop clear of walls.
A desktop touching a wall can jam or overload the motors, damaging the desk, the wall and items on top.



Remove anything taller than 20 in / 51 cm from under the desk.
A lowering desktop can crush it or jam, and items on the desk may fall.



Use only between 32 °F and 104 °F / 0 °C and 40 °C.
Outside this range the motors or control box can fail, and the desk may stop or move unpredictably.



Keep away from corrosive gases, liquids and dust.
They damage motors, control box and wiring, with a risk of short circuit, electric shock or fire.



Keep hands, feet, hair and loose clothing away from moving parts.
A shaft rotates under the desktop and the columns can crush. Hair, clothing or fingers can be caught, causing serious injury. Tie back long hair.



Operate the desk only as described in this manual.
Abnormal or unintended operation can cause damage and injury, and the company bears no warranty or liability for it.

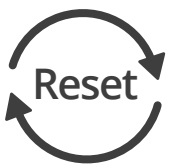

Perform a manual reset after first installation and after any power loss.
Anti-collision is inactive during the reset. The desk will not stop if it meets an obstacle or a person, risking crush injury and damage. Keep people, pets and objects clear until it finishes.



Tempered Glass Top – Handle with Care

- Always lift and carry the glass desktop carefully with assistance;
- Place it on a clean, flat, padded surface during assembly;
- Avoid striking or bumping its edges and corners against hard surfaces, or applying uneven pressure;
- During use, avoid impacts, scratches, concentrated loads, or collisions with surrounding objects;
- Never sit or stand on the glass desktop.

Customer Service

30-Day Easy Returns

If your purchase isn't the right fit, you can return it within the 30-day return window.

Reliable Warranty

2-Year Warranty for Motor & Electronics
5-Year Warranty for Desk Frame & Structural Components

24x7h Support

Simple email us at **support@yfs.life**.
Our support team typically responds within **24x7 hours**.

Product Overview

Height Range	28.3"–46.5" (720–1180 mm)
Weight Capacity	Up to 110 lbs / 50 kg
Lift Speed	Up to 0.8 in/sec (20 mm/sec)
Operating Noise	55 dB maximum
Memory Presets	3 Programmable Heights
Safety Features	Anti-Collision Protection
Frame Material	Powder-Coated Steel
Desktop Material	Tempered glass
USB-A & USB-C Charging	**Single Port:** Up to 18W **Dual Port:** 5W

Safety & Compliance

Including **FCC SDoC**, **TSCA Title VI**, and **California Proposition 65**, where applicable.

Pre-Installation Preparation

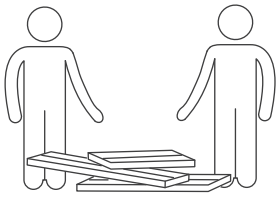

Complete through collaboration.

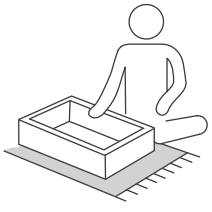

Assemble on a clean, flat, and protective surface.

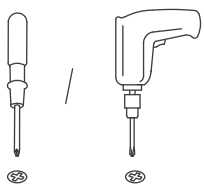

Phillips screwdriver or drill required (not provided).

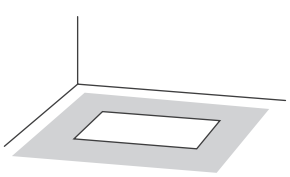

Allow an assembly area at least twice the desktop size.

PARTS LIST

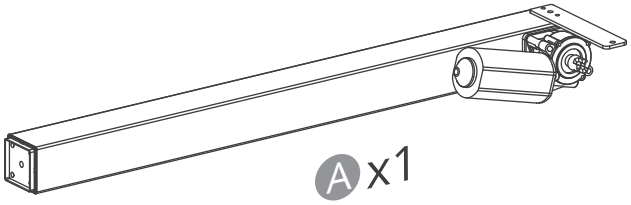

A x1

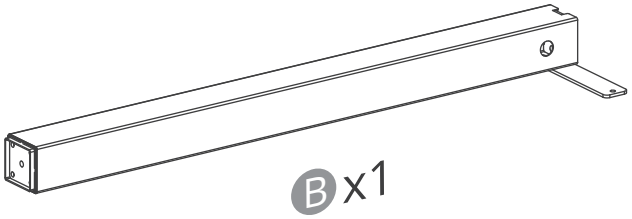

B x1

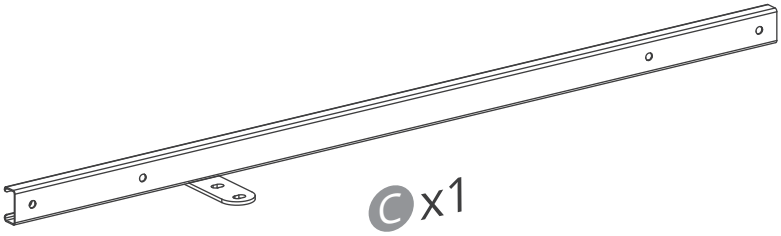

C x1

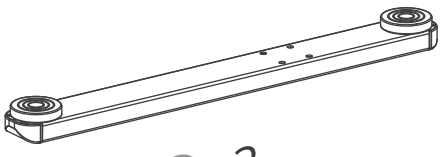

D x2

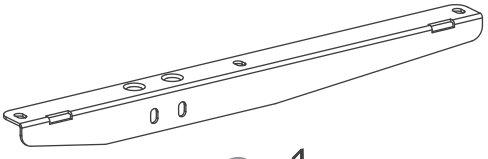

F x1

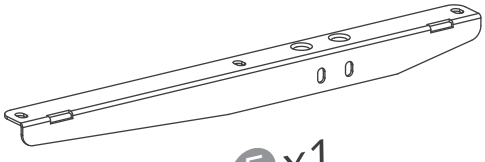

E x1

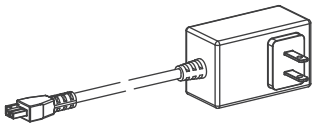

I x1

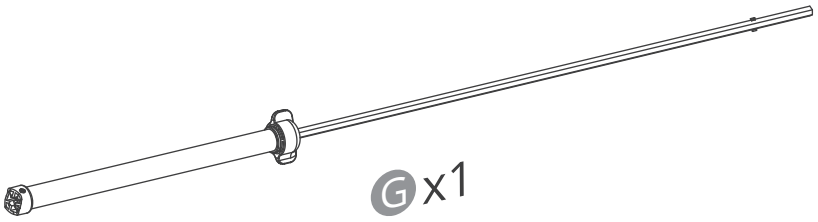

G x1

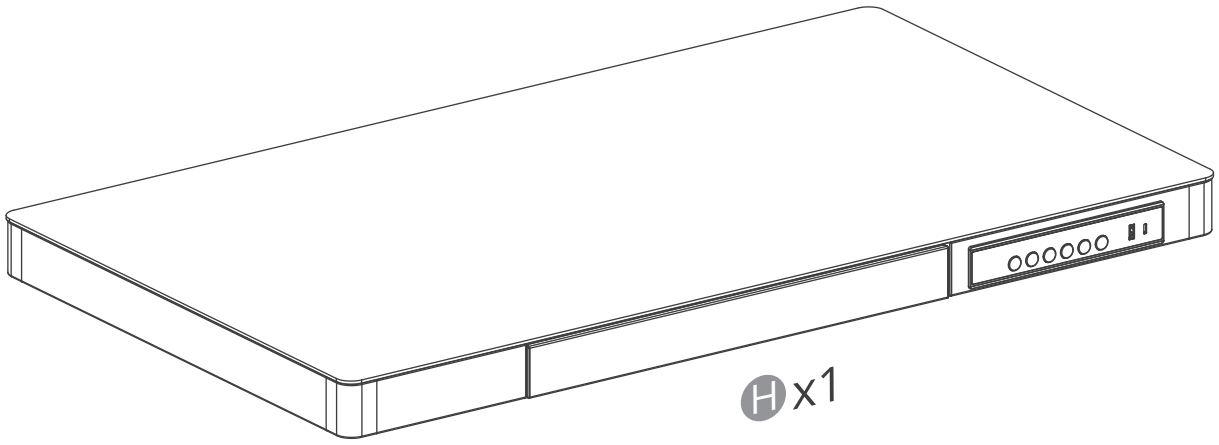

H x1

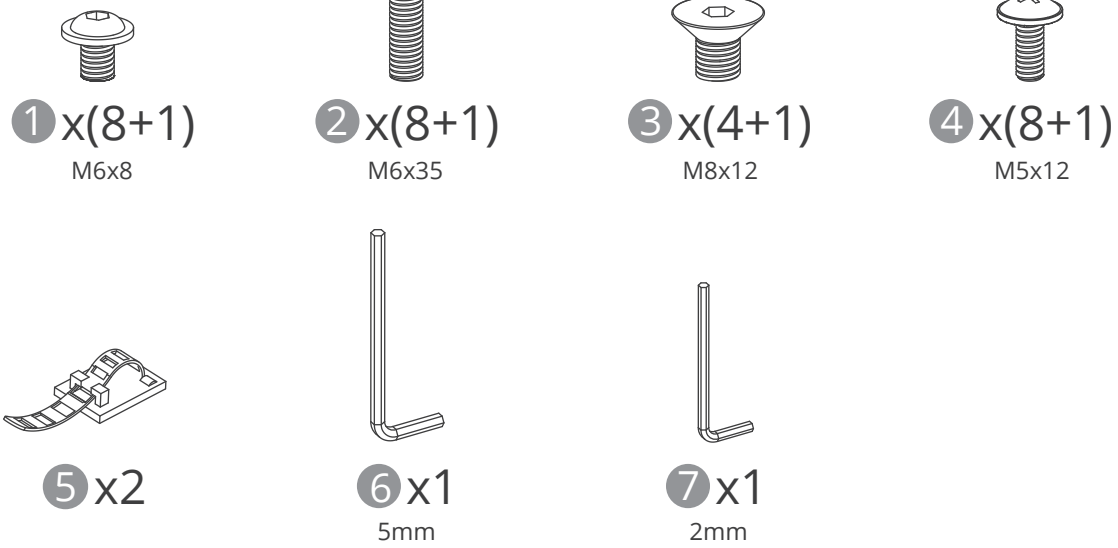

1 x(8+1)
M6x8

2 x(8+1)
M6x35

3 x(4+1)
M8x12

4 x(8+1)
M5x12

5 x2

6 x1
5mm

7 x1
2mm

EXPLODED VIEW DIAGRAM

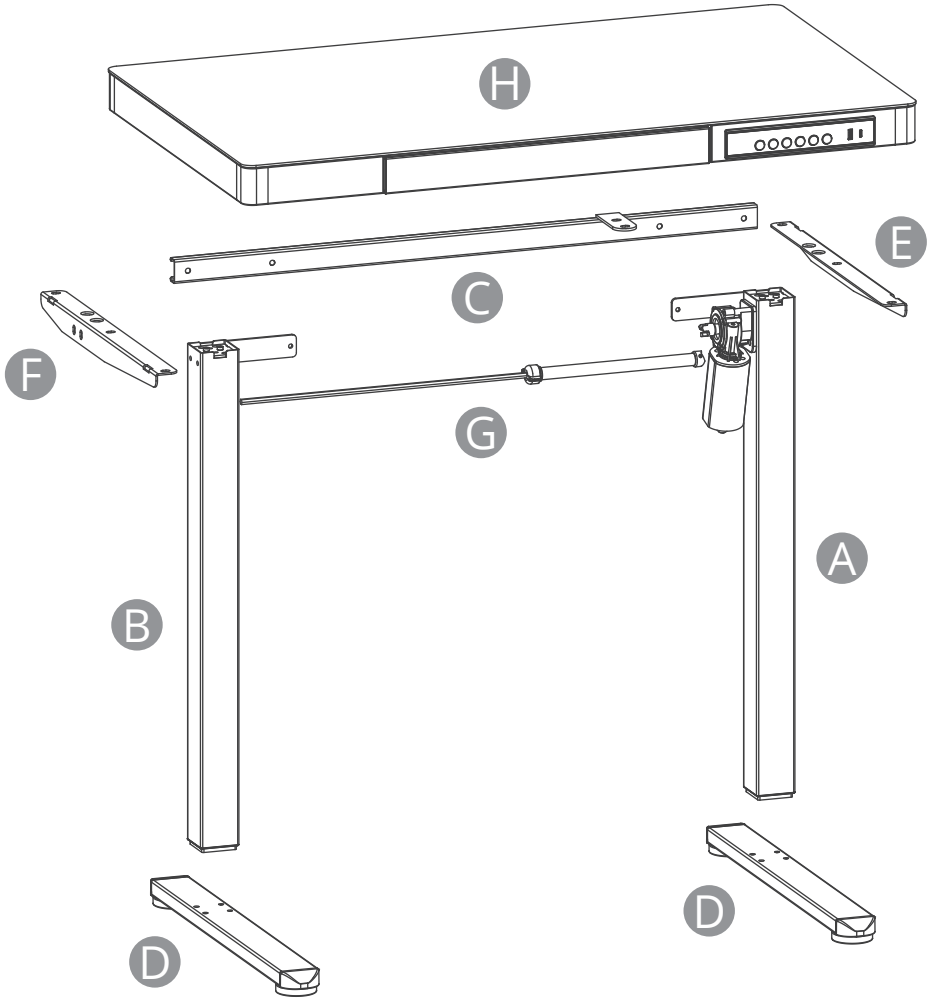

1

The recommended torque for the locking frame screws is **15 N·m**; please ensure the screws are tightened for a more stable table.

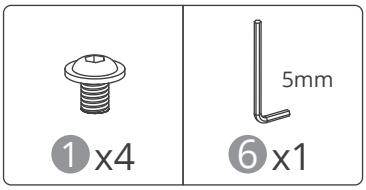

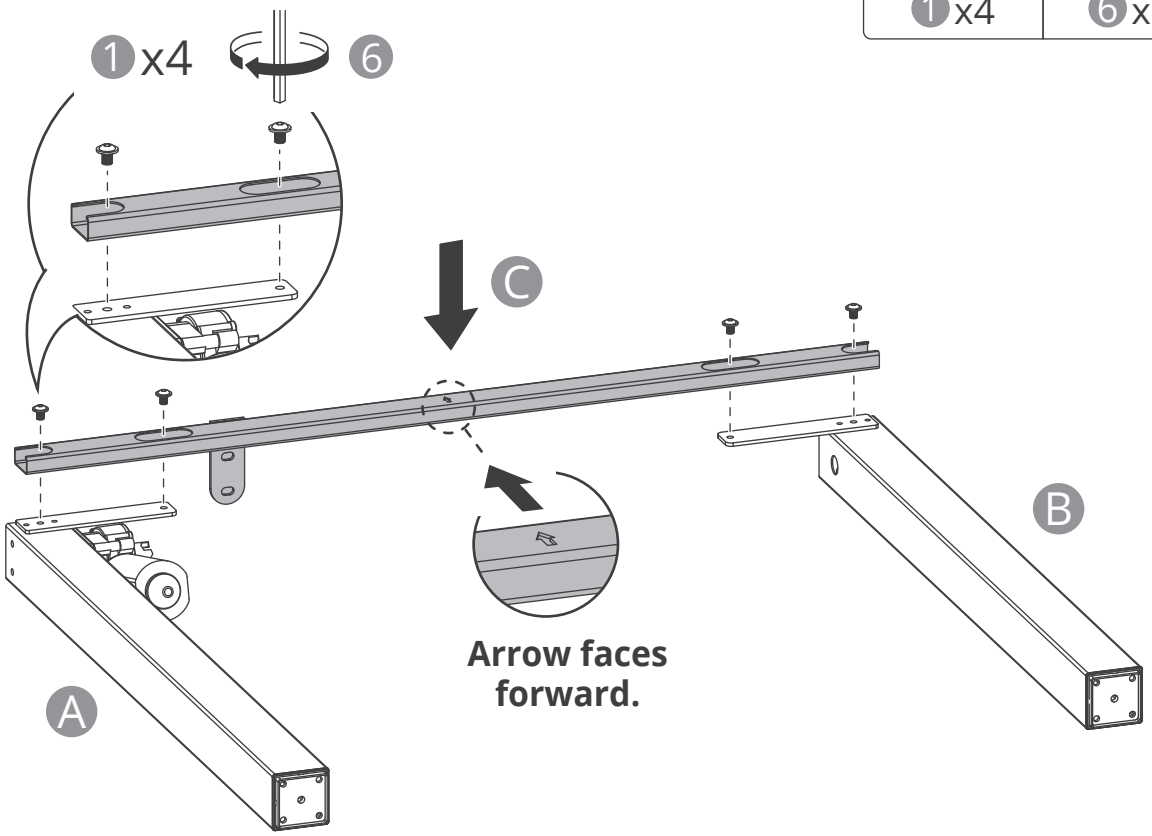

2

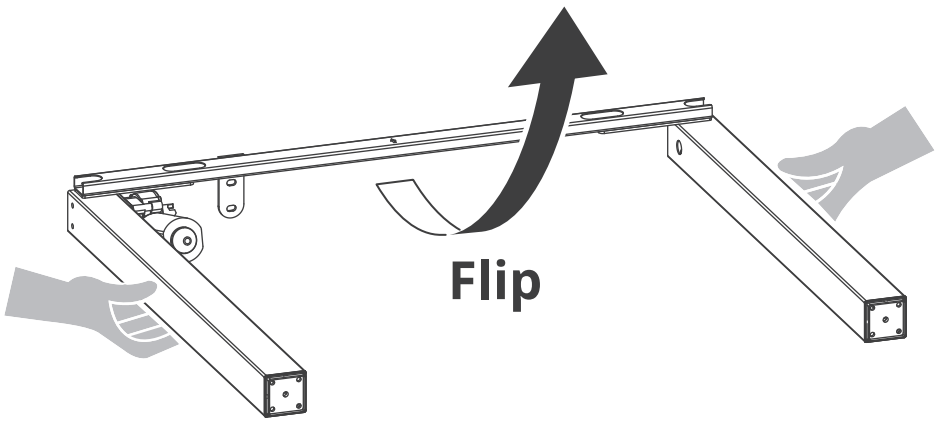



We recommend two people assist with flipping to prevent crossbar deformation.

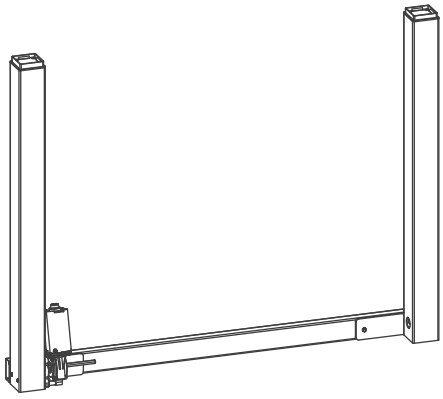

3 The recommended torque for the locking frame screws is **15 N·m**; please ensure the screws are tightened for a more stable table.

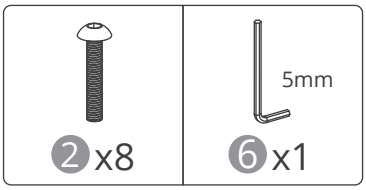

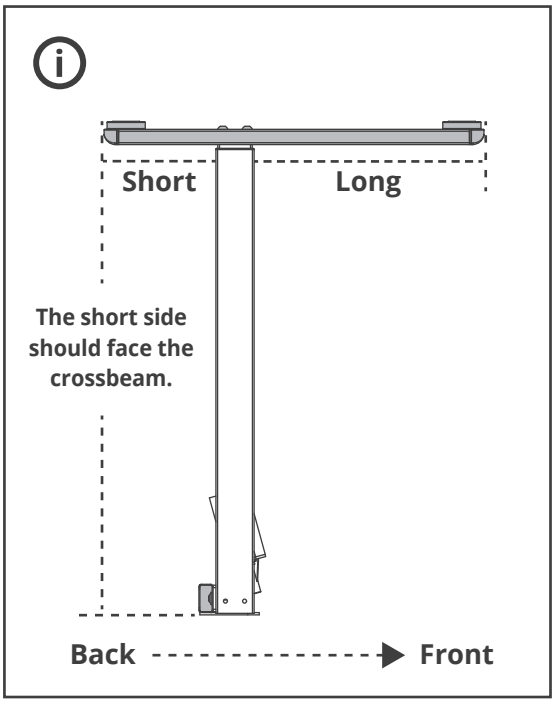

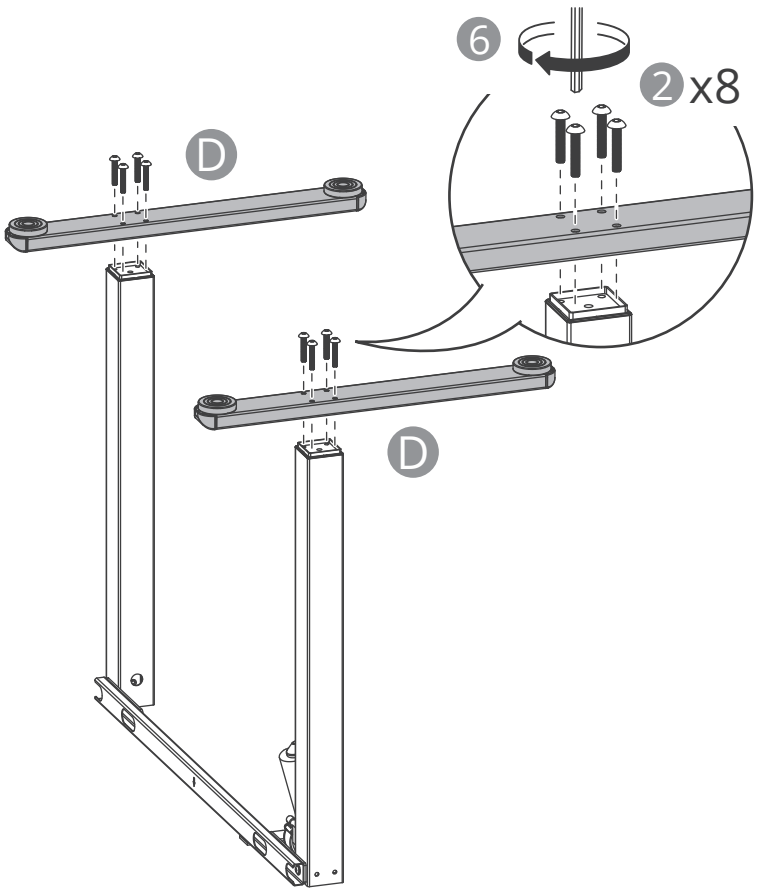

4

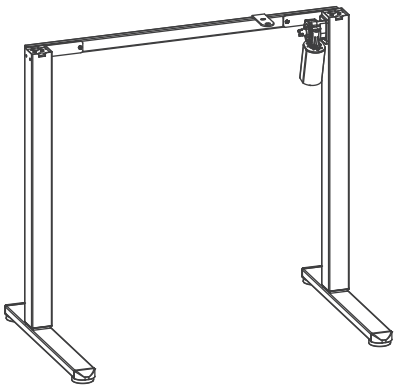

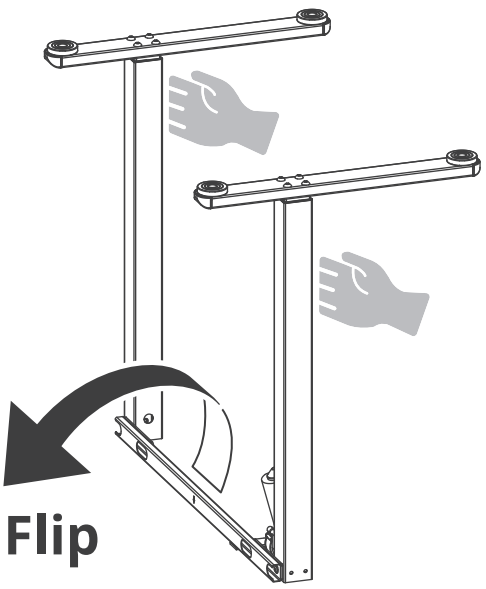

TEAM LIFT

5 Pay attention to the orientation of the side wings, and do not fully tighten the screws.

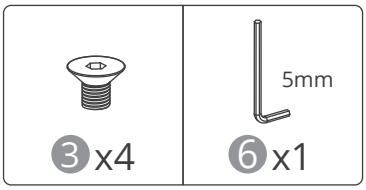

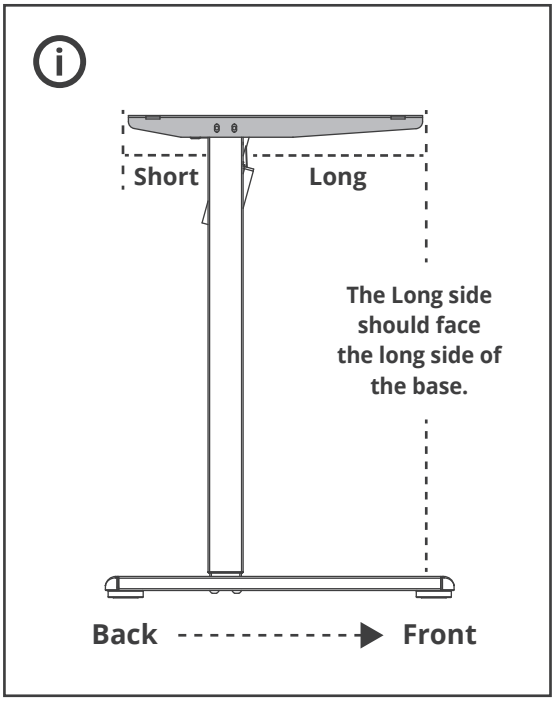

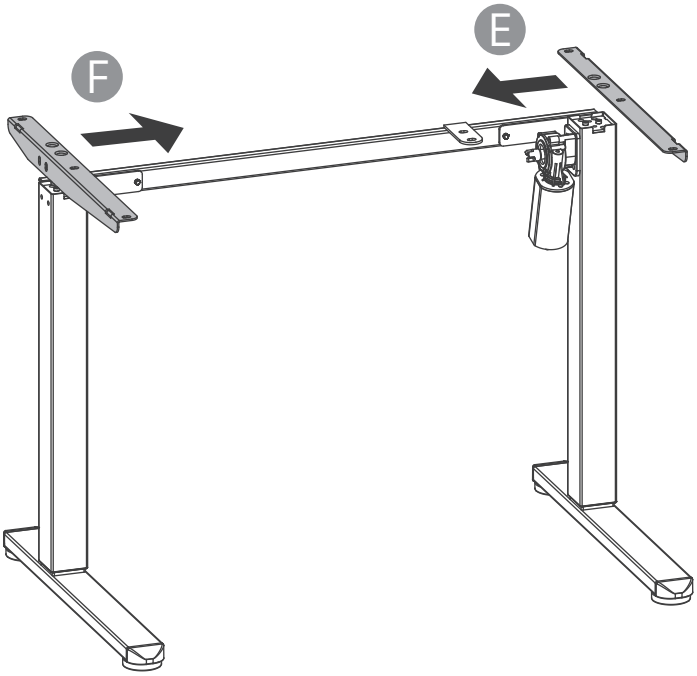

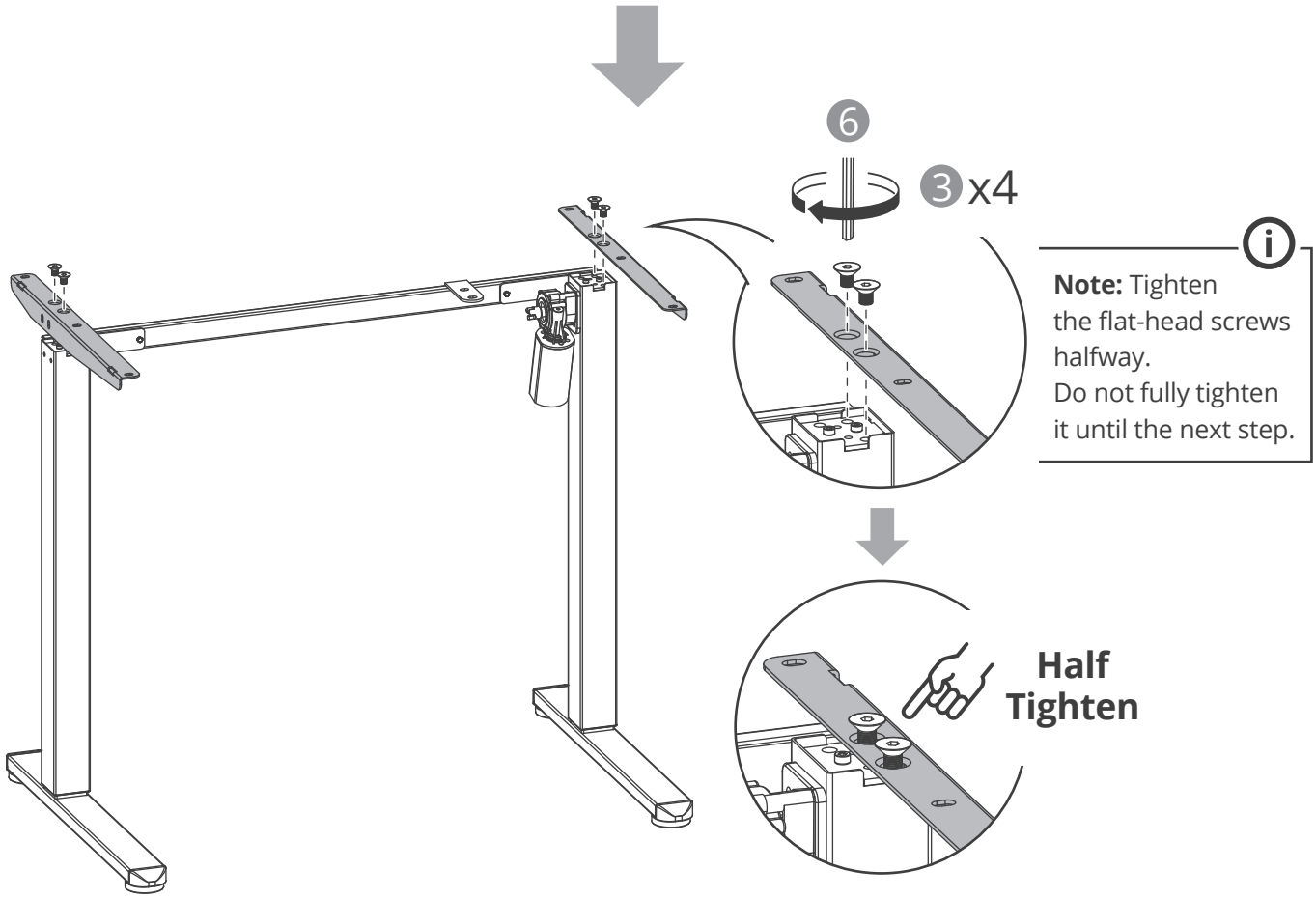

Note: Tighten the flat-head screws halfway.
Do not fully tighten it until the next step.

6

The recommended torque for the locking frame screws is **15 N·m**; please ensure the screws are tightened for a more stable table.

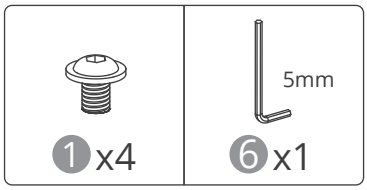

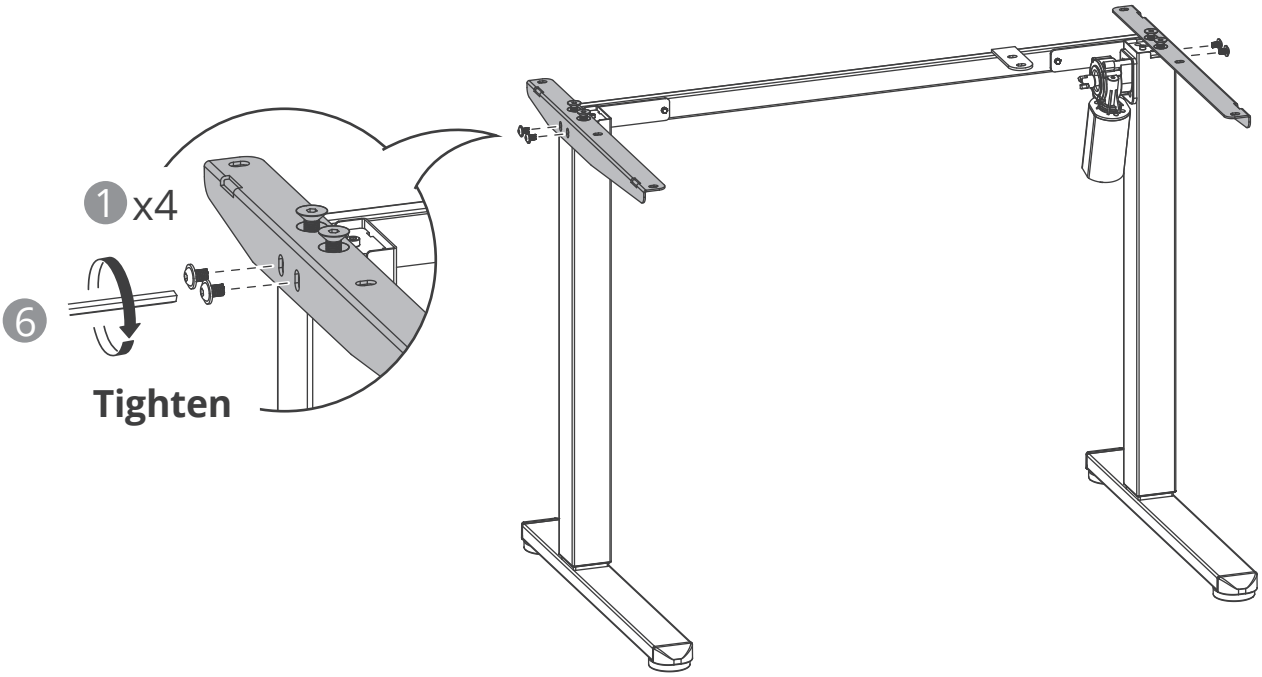

7

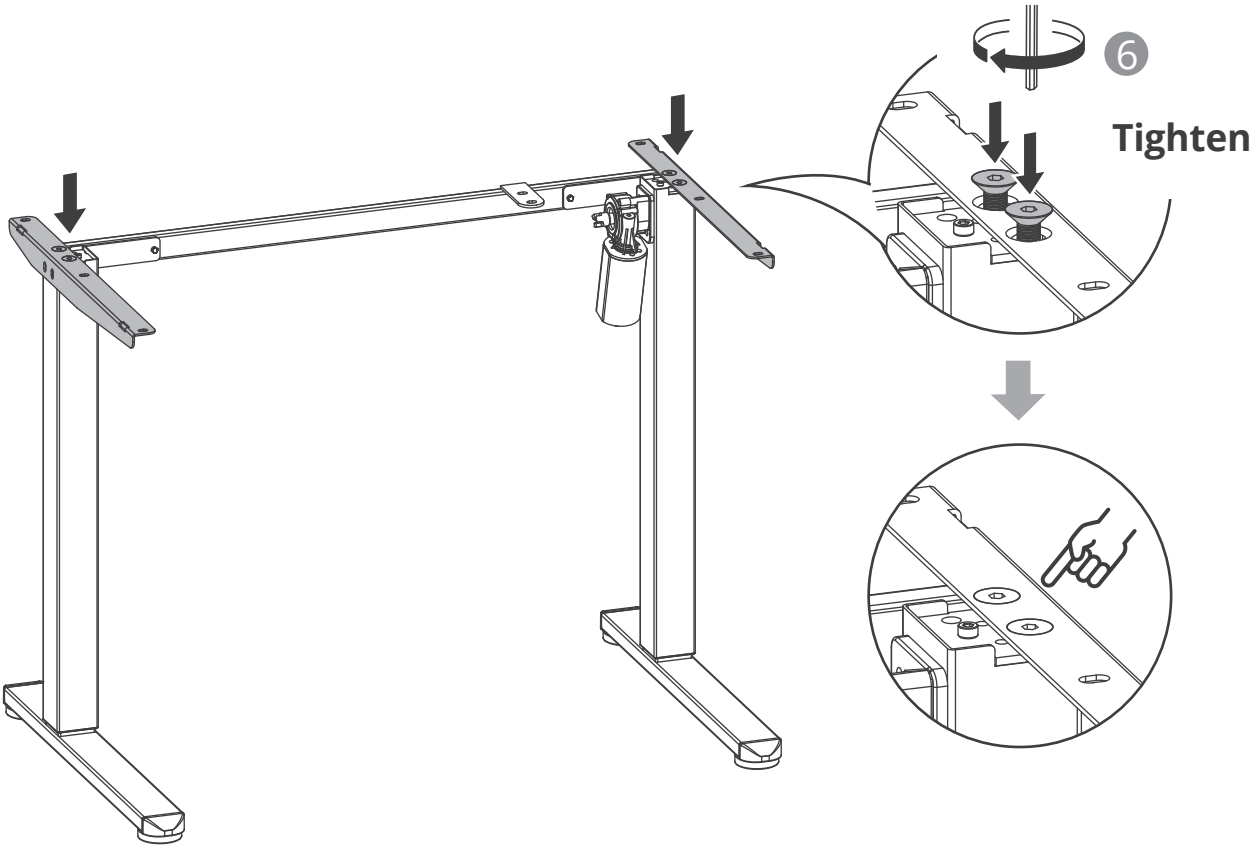

8

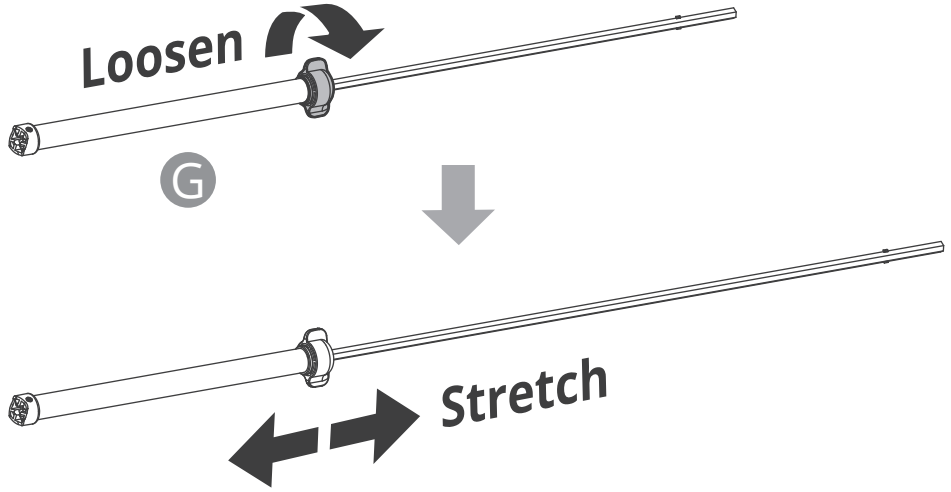

9

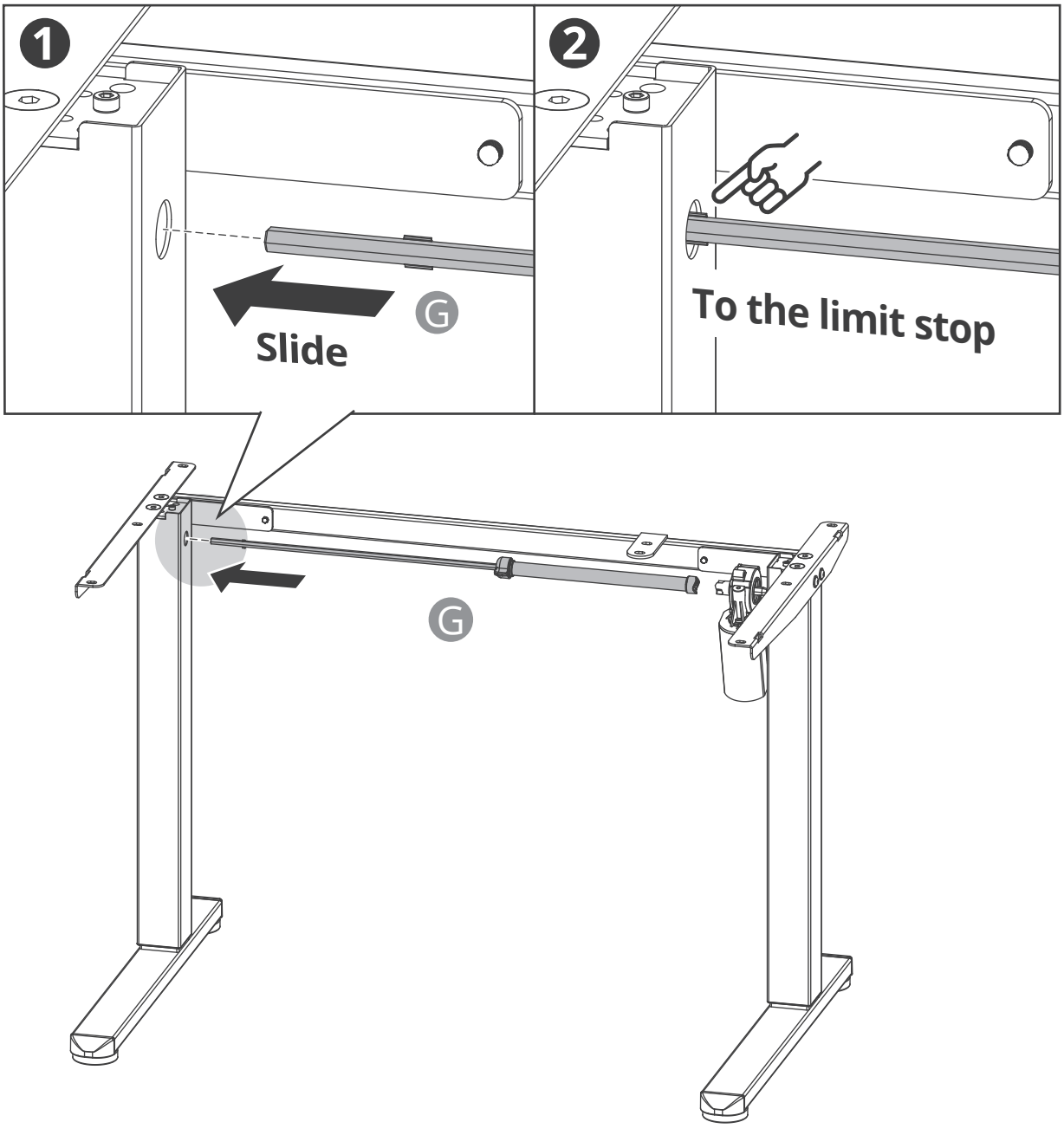

Leveling Adjustment for the Legs

1 **Ensure both legs are at the same height.**

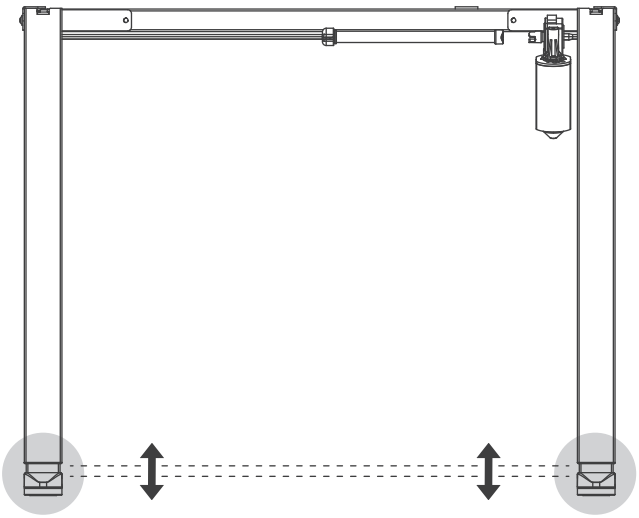

The gaps shown here must be identical, indicating horizontal alignment.

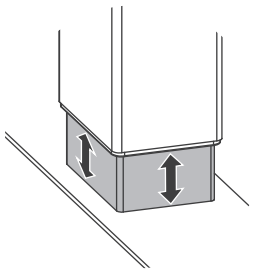

2 **Adjustment Procedure.**

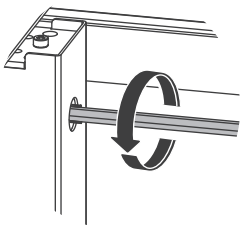

If the leg heights differ, **rotate the transmission rod clockwise** to align them.

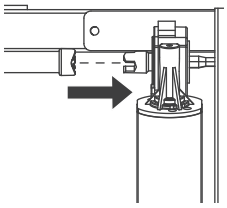

Important: Ensure both desk legs are fully lowered and completely level. Once leveled, slide the sync rod sleeve onto the sync rod on the motor side.

Uneven Height

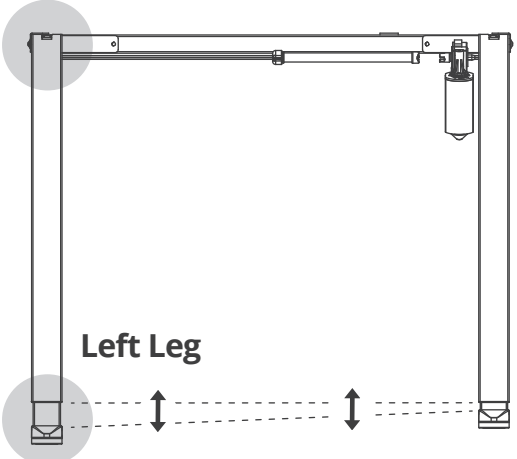

Level Aligned

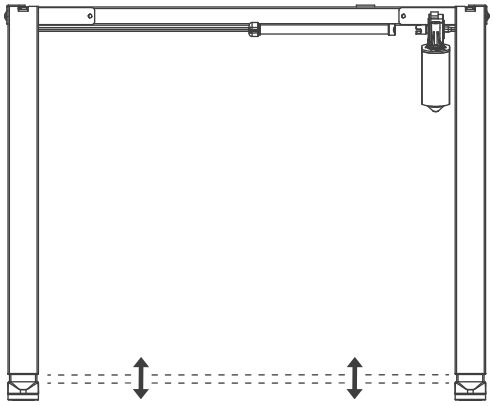

10

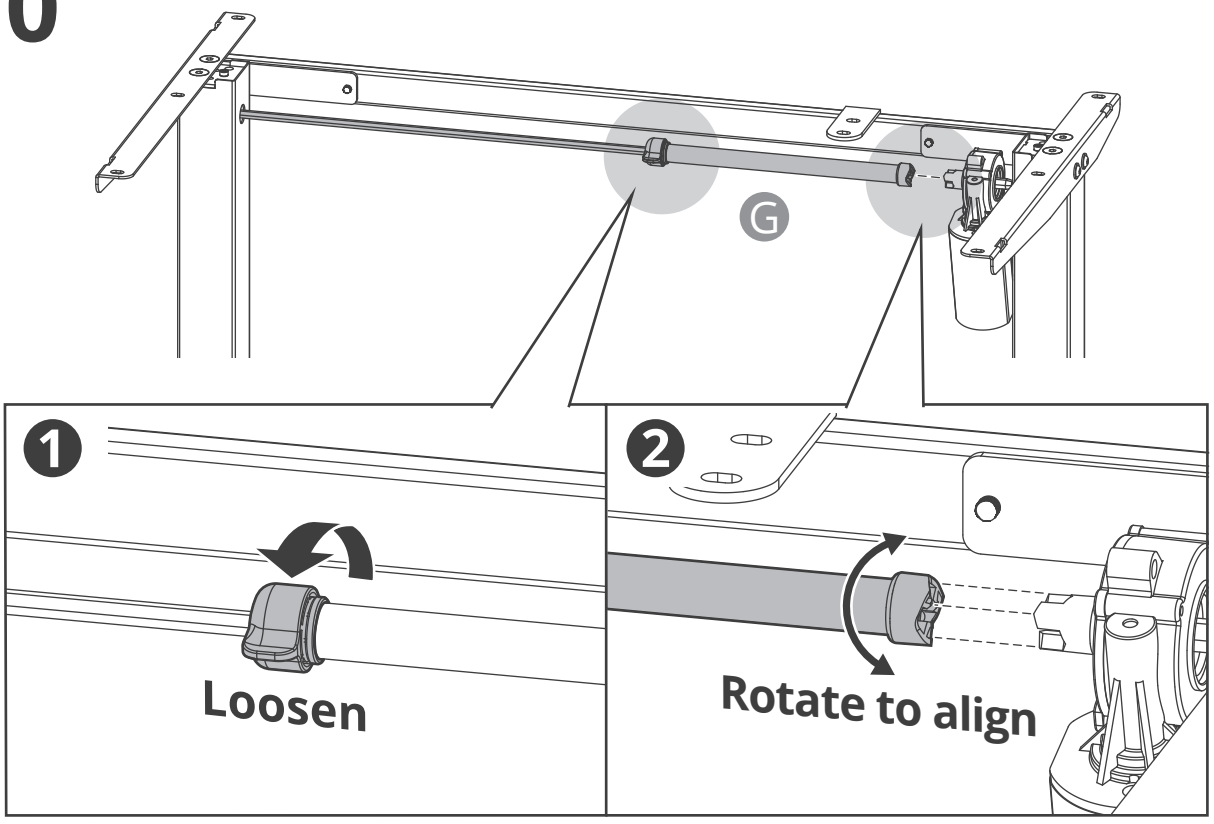

11

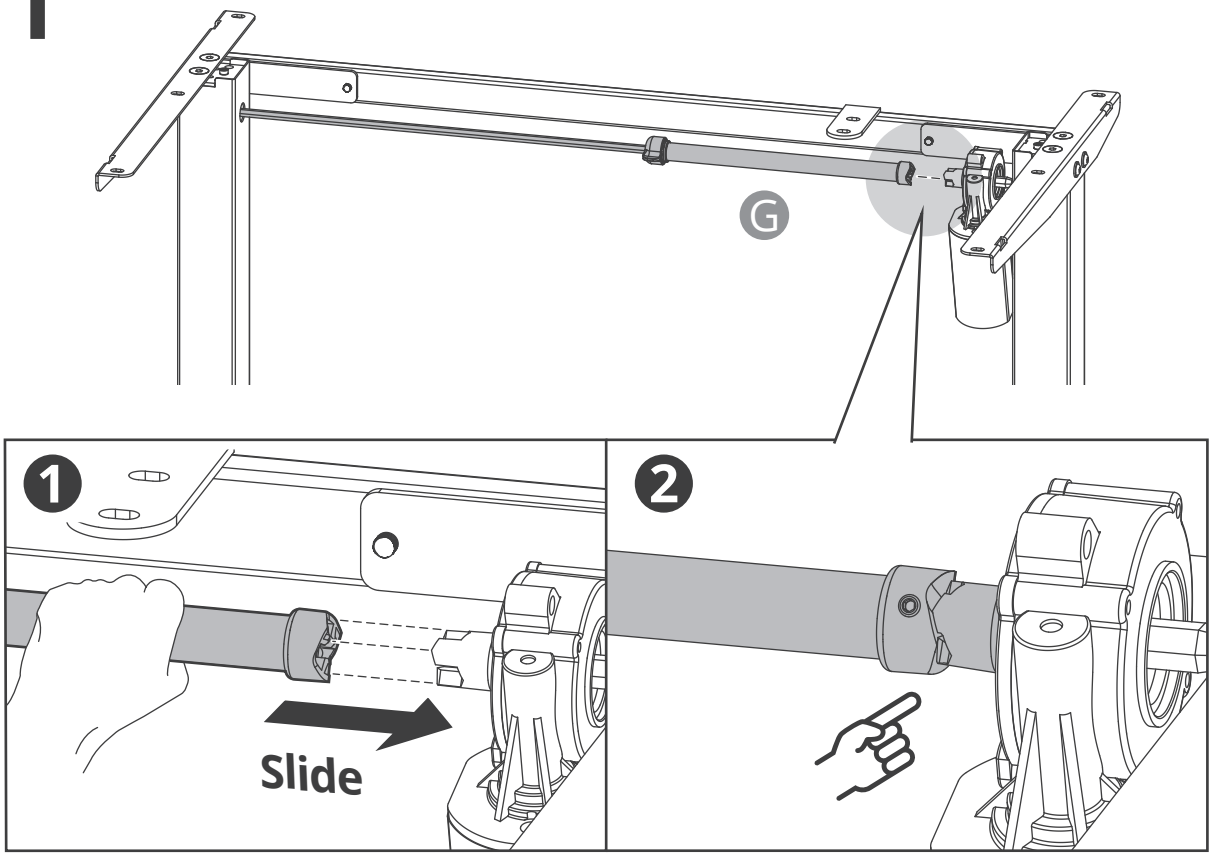

12

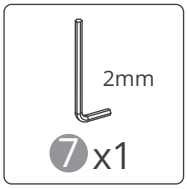
2mm
7 x1

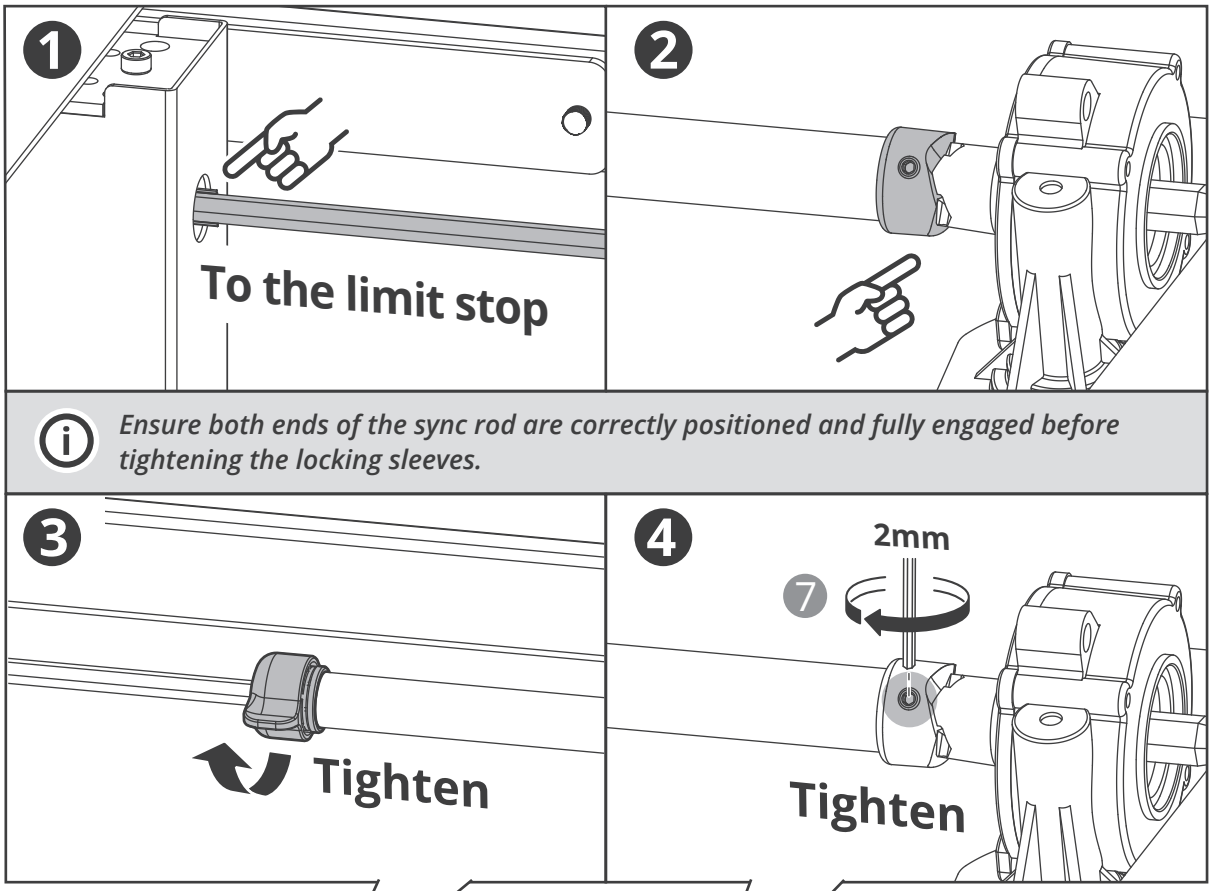
1
To the limit stop
2
Ensure both ends of the sync rod are correctly positioned and fully engaged before tightening the locking sleeves.
3
Tighten
4
2mm
7
Tighten

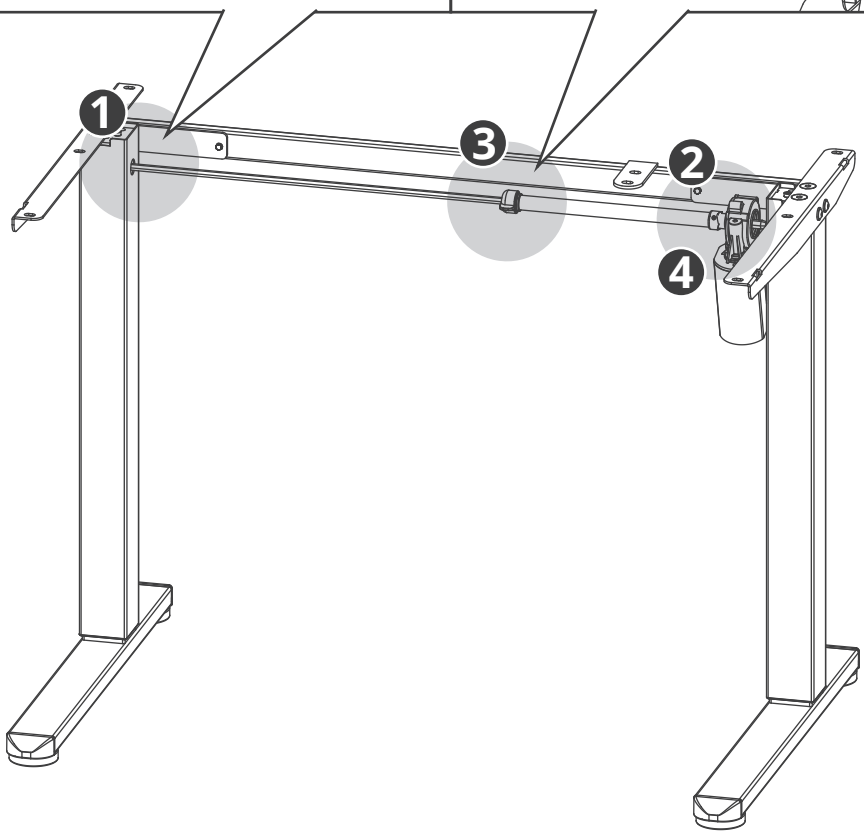
1
3
2
4

13

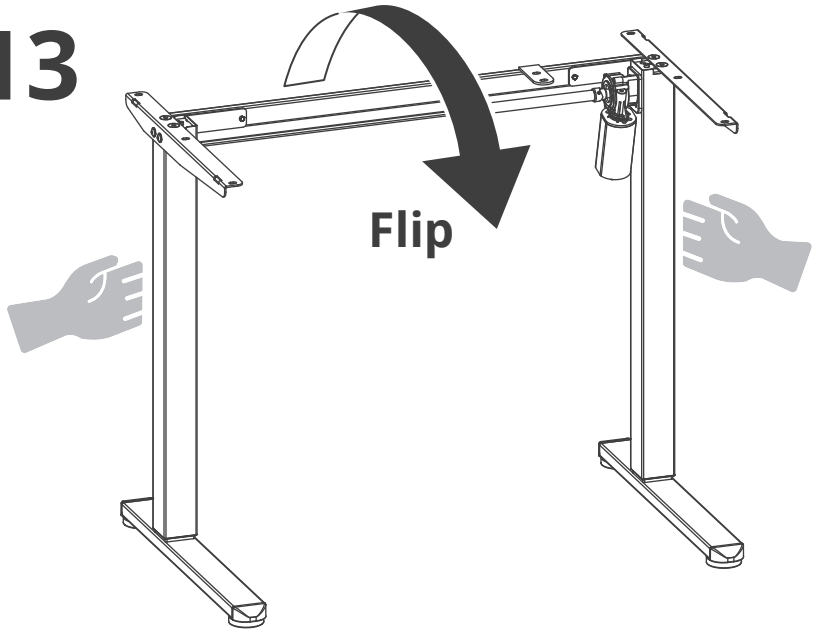

TEAM LIFT

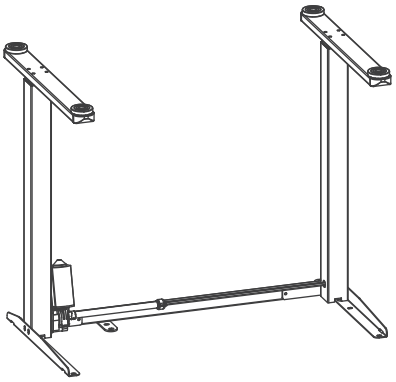

14

Note: Desktop panel screws: **5-8 N·m**. Drive screws perpendicular to the surface.

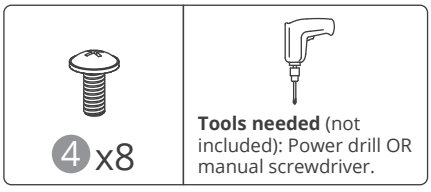

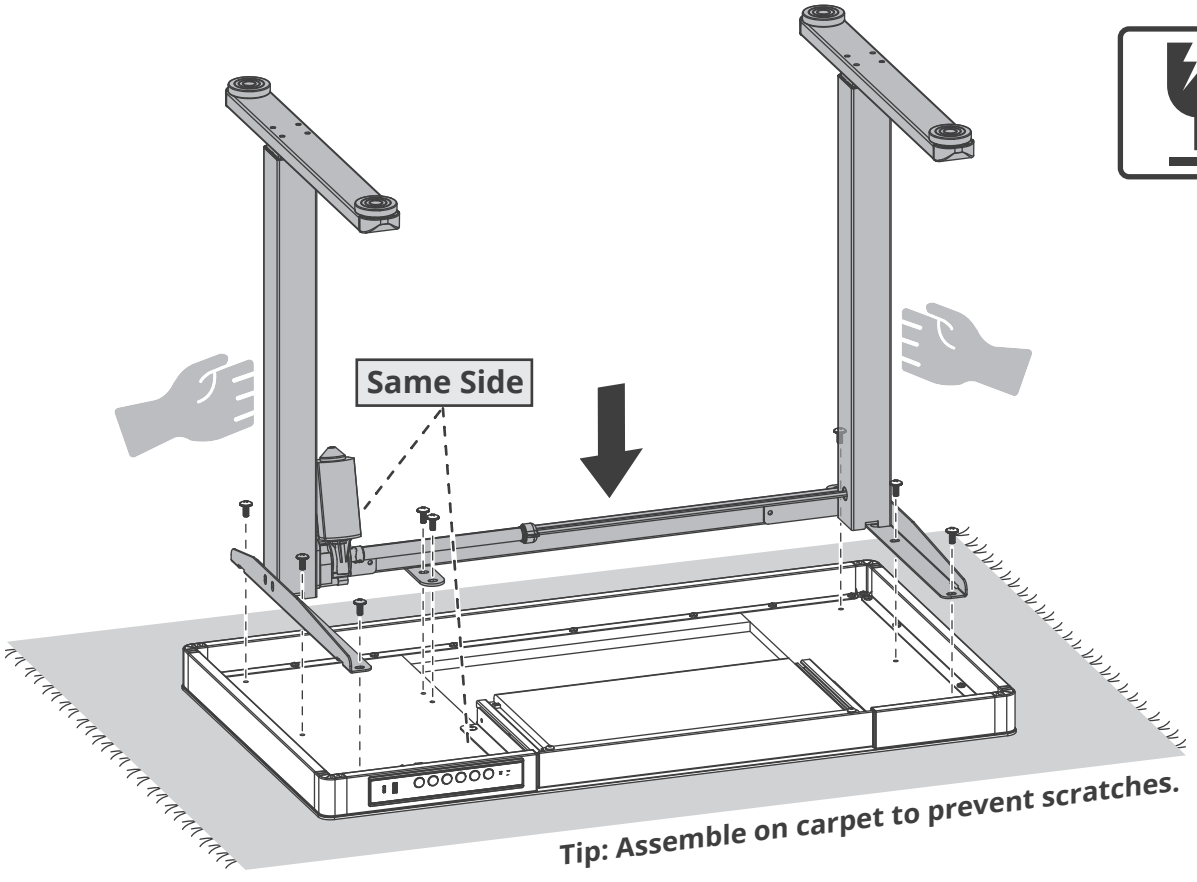

15

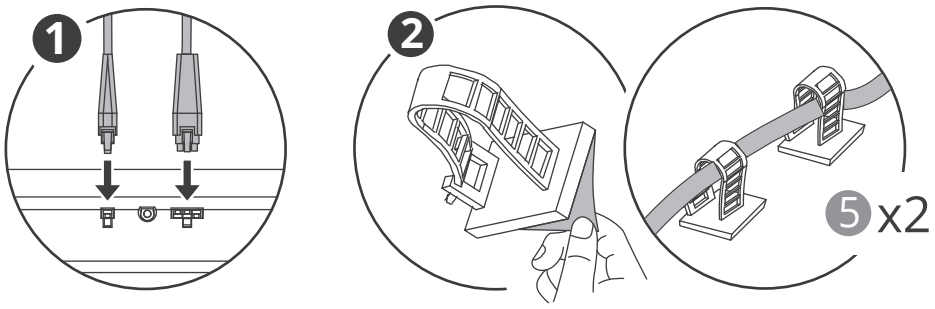

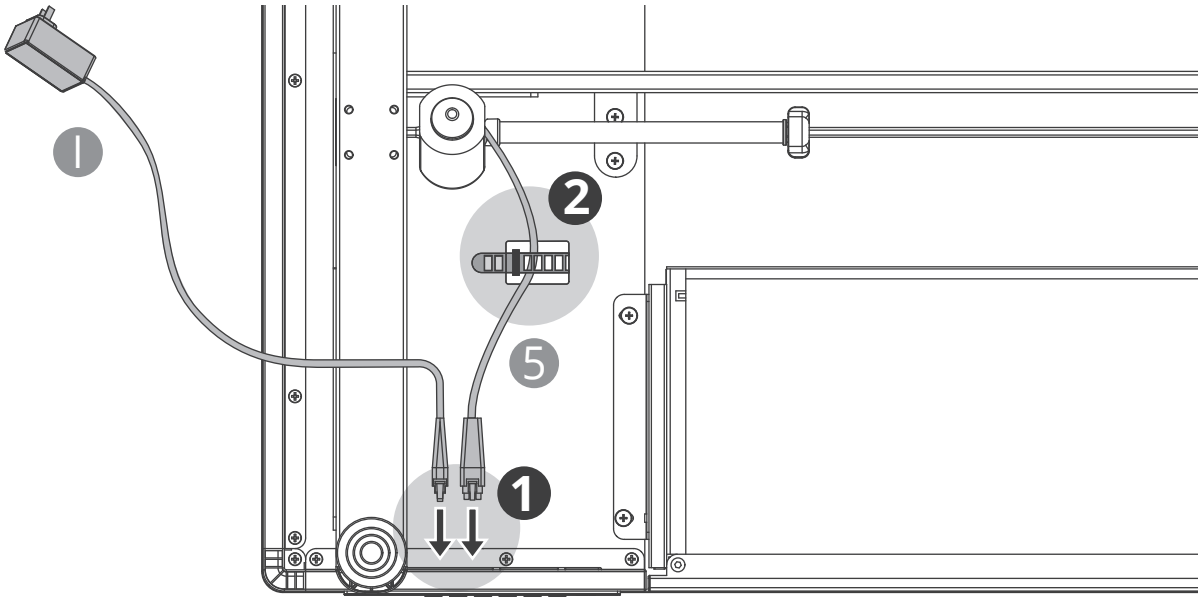

16

Note: Do not rest any weight on the keypad during the flip.

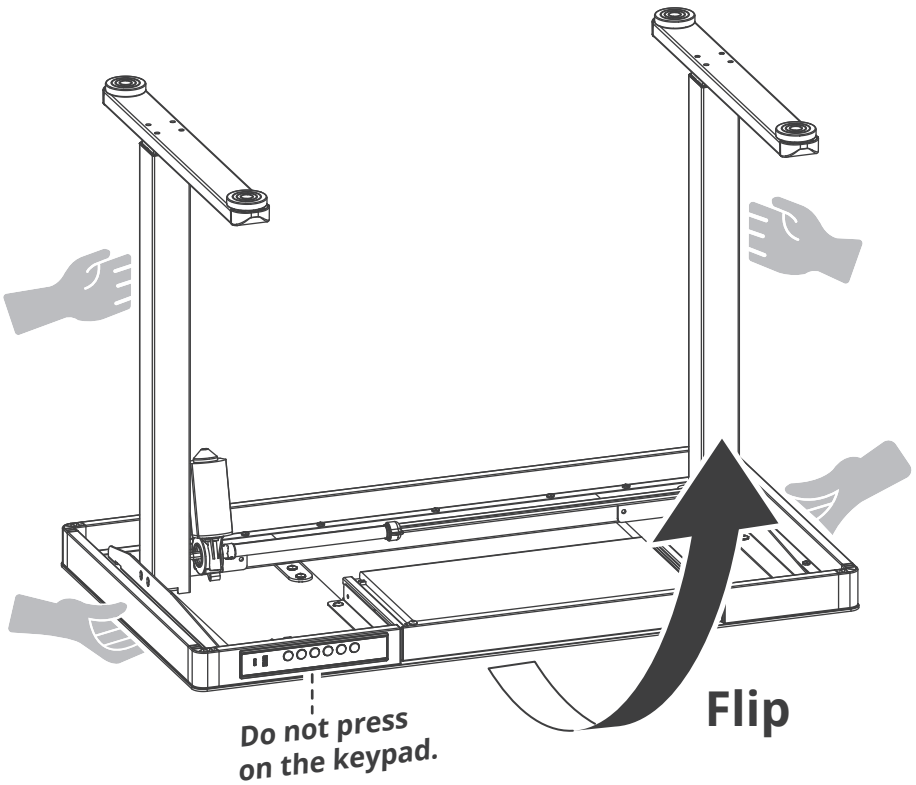





NOTICE: Protect the Glass Desktop During the Flip.

17

Connect the main power cord to the power strip.



You're amazing!
The installation is now complete.
Enjoy your Standing Desk!

Keypad User Guide

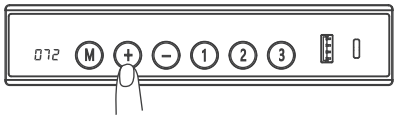

Height Adjustment

Press and hold the + or − button to adjust the desk to your preferred height.

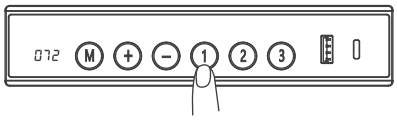

Memory Heights

Briefly press memory button 1 , 2 , or 3 .

The desk will automatically move to your saved preset height.



Memory Height Setting

1. Press and hold the + or − button to adjust the desk to your desired height.
2. Press the M button once (the display will flash).
3. Press any memory button (1 , 2 , or 3) to save the current height.

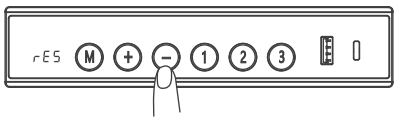

Reset Procedure

If the system malfunctions or the display shows rES , you need to reset the standing desk.

1. Press and hold the − button for 5 seconds. The handset will display rES ,indicating that the desk has entered reset mode.
2. The desk will move to its lowest height (28.3 in /72 cm) and then slightly rebound. The lowest height value will be displayed, confirming the reset is complete.

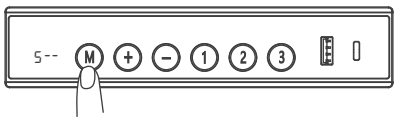

Switching Display Units (CM/Inches)

1. Press the M button; the display will show S-- and flash.
2. Press the M button again until Un appears on the display.
3. Press M to enter the setting.
4. Press + or − to toggle between S1 (Centimeters) and In (Inches).
5. Press M to confirm and save your choice.



Adjusting Anti-Collision Sensitivity

1. Press the M button; the display will show S-- and flash.
2. Press the M button twice until CF appears on the display.
3. Press M to enter the setting.
4. Press + or − to select your preferred collision sensitivity level:
   - OFF: Anti-collision disabled
   - L : Low sensitivity
   - n : Normal sensitivity
   - H : High sensitivity
5. Press M to confirm and save your choice.

Frequently Asked Questions (FAQ)	
Handset Displays "Hot"	**Possible Cause** Overheat protection activated due to continuous operation. **Solutions** 1. Allow the motor to cool down for 15–18 minutes before adjusting the height again. 2. If the problem persists, please take a video of the issue and contact after-sales support at support@yfs.life.
Handset Displays "E10"	**Possible Cause** Motor safety sensor detection issue. **Solutions** 1. Power off the desk, unplug the handset cables, reconnect all cables securely, turn the power back on, and perform a **Reset**. 2. If the problem persists, please take a video of the issue and contact after-sales support at support@yfs.life.
Handset Displays "E20"	**Possible Cause** Desk overload (exceeding maximum weight limit). **Solutions** 1. Power off the desk, remove heavy objects from the desktop, turn the power back on, and resume operation. 2. If the problem persists, please take a video of the issue and contact after-sales support at support@yfs.life.
Handset Displays "E02"	**Possible Cause** Anti-collision triggered by vibration, sudden impact, or excessive desk tilt. **Solutions** 1. Clear any obstructions around the desk. If the error persists, perform a **Reset**. 2. If the problem persists, please take a video of the issue and contact after-sales support at support@yfs.life.

Handset Displays "E31" / "E32"	**Possible Cause** Input voltage too low (**E31**) or too high (**E32**). **Solutions** 1. Ensure the official power adapter is connected. Unplug and reconnect all cables, power back on, and perform a **Reset**. 2. If the problem persists, please take a video of the issue and contact after-sales support at support@yfs.life.
Handset Malfunction or No Response	**Possible Cause** Power disconnect, loose cable connections, or power module issue. **Solutions** 1. Check that all power and controller cables are firmly plugged into the desk and wall outlet. Unplug for 30 seconds and plug back in. 2. If the problem persists, please take a video of the issue and contact after-sales support at support@yfs.life.