USER MANUAL

48” Desktop

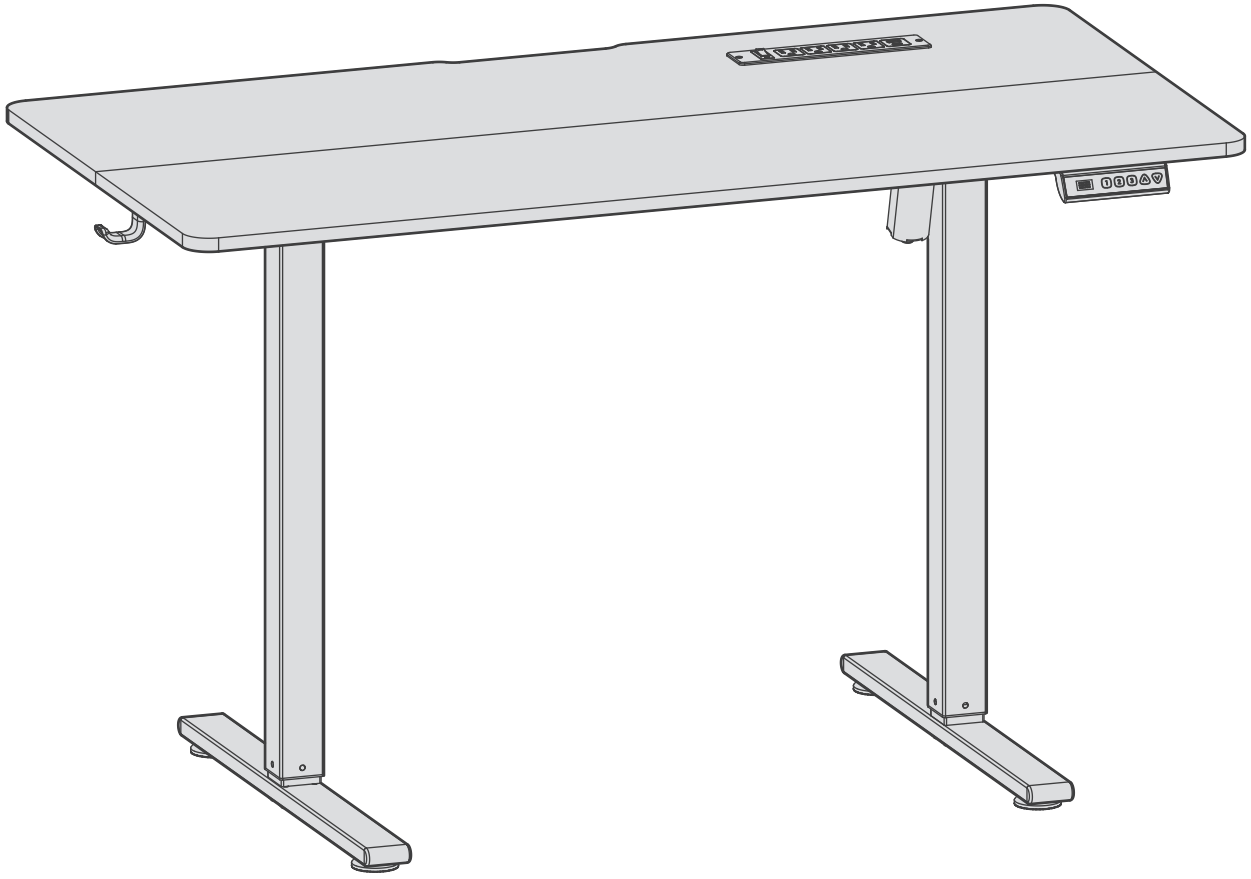

Scan QR code for installation video

support@yfs.life

yfs.life/aag

Caution

- Keep children and animals away from the desk during use. Ensure the desktop is not touching any walls.
- Remove obstacles taller than 20 "/51 cm from underneath the desk.
- Operate only in a working environment temperature of 32 °F - 95 °F / 0 °C - 35 °C.
- Keep product away from corrosive gases, liquids and dusty objects.
- Keep hands, feet and other body parts in a safe position during operation. Anti-collision is not automatically enabled when reset.
- The company does not bear any warranty or liability for damage and human injury caused by any abnormal or un-intended operation of the equipment.
- It is necessary to perform a manual reset after the initial installation or power cycling the equipment.

Safety Warnings

- Do not overload the power outlets. Ensure the total power consumption does not exceed 1500W of the outlets.
- Avoid using the desk in humid environments to prevent electric shock or short circuits.
- Regularly inspect the power cords and outlets. If any damage is found (e.g. cracks, looseness, or burn marks), stop using the product immediately and contact a professional for repair or replacement.
- Do not unplug an electrical appliance by pulling its flexible power cord. Otherwise, it may damage the wire connection and cause danger.
- Do not spill food or liquids on the outlets.
- Place the desk where children cannot easily access the power outlets.
- Use childproof outlet covers to prevent accidental contact by children.
- Educate children not to climb on or pull the desk to avoid accidents.

Customer Service

30-Day Easy Returns

If your purchase isn't the right fit, you can return it within the 30-day return window.

Reliable Warranty

2-Year Warranty for Motor & Electronics
5-Year Warranty for Desk Frame & Structural Components

24x7h Support

Simple email us at **support@yfs.life**.
Our support team typically responds within **24x7 hours**.

Product Overview

Height Range	28.3"–46.5" (720–1180 mm)
Weight Capacity	Up to 176 lb (80 kg)
Lift Speed	Up to 0.6 in/sec (15 mm/sec)
Operating Noise	50 dB maximum
Memory Presets	3 Programmable Heights
Safety Features	Anti-Collision Protection • Child Lock
Frame Material	Powder-Coated Steel
Power Strip USB Output	USB-C: Max. 20W USB-A: Max. 18W Dual-Port Output: Max. 18W (Shared)

Safety & Compliance

Including **FCC SDoC**, **TSCA Title VI**, and **California Proposition 65**, where applicable.

Pre-Installation Preparation

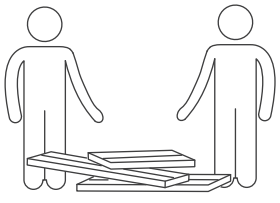	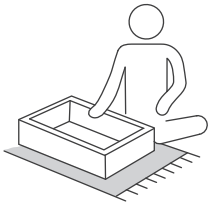	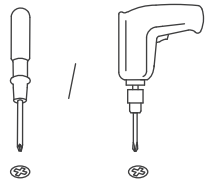	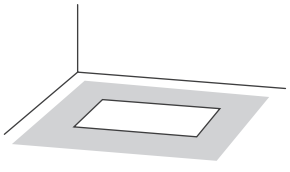
Complete through collaboration.	Assemble on a clean, flat, and protective surface.	Phillips screwdriver or drill required (not provided).	Allow an assembly area at least twice the desktop size.

PARTS LIST

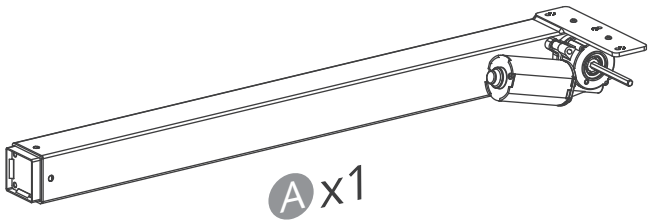

A x1

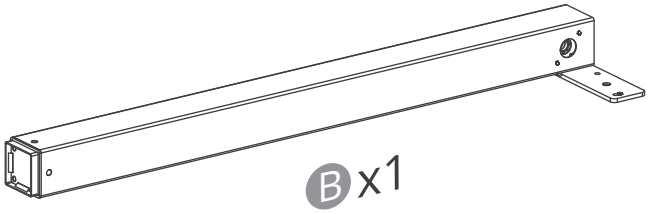

B x1

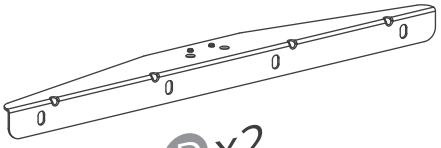

D x2

(48″x24″: 400 mm)

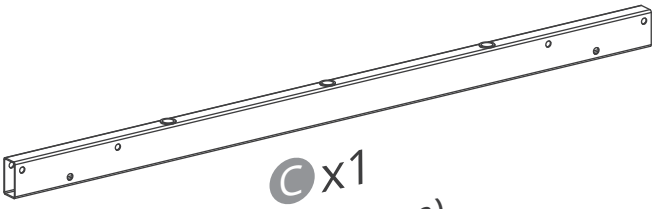

C x1

(48″: 800 mm)



F x2

(48″: 590 mm)

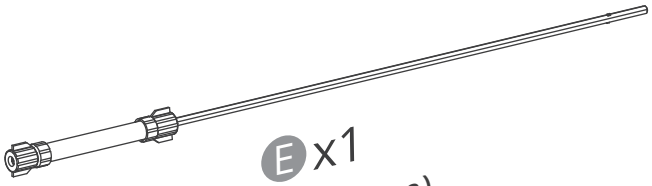

E x1

(48″: 610 mm)

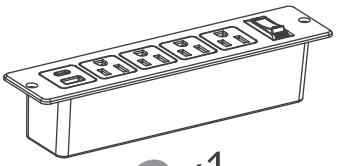

L x1



I x2

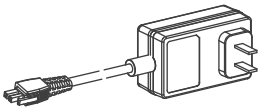

H x1



G x1

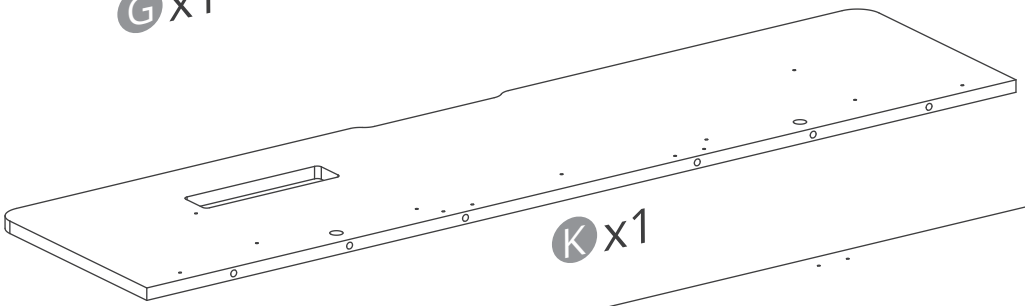

K x1

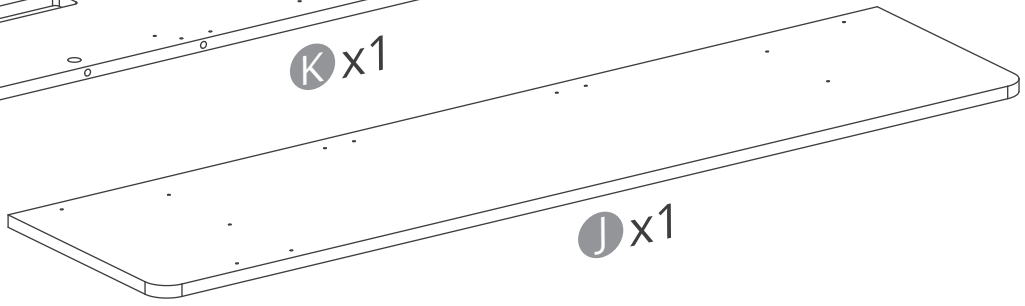

J x1



1 x(2+1)
L32xM6x8



2 x(2+1)
Ø15x12



3 x(4+1)
Ø8x40

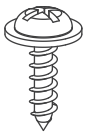

4 x(25+1)
ST5x14

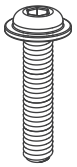

5 x(6+1)
M6x28



6 x(4+1)
M6x12

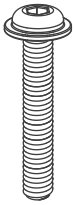

7 x(8+1)
M6x35



8 x(2+1)
M3x12

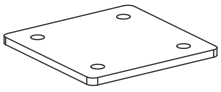

9 x2

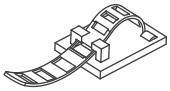

10 x9

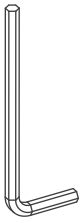

11 x1
4mm

EXPLODED VIEW DIAGRAM

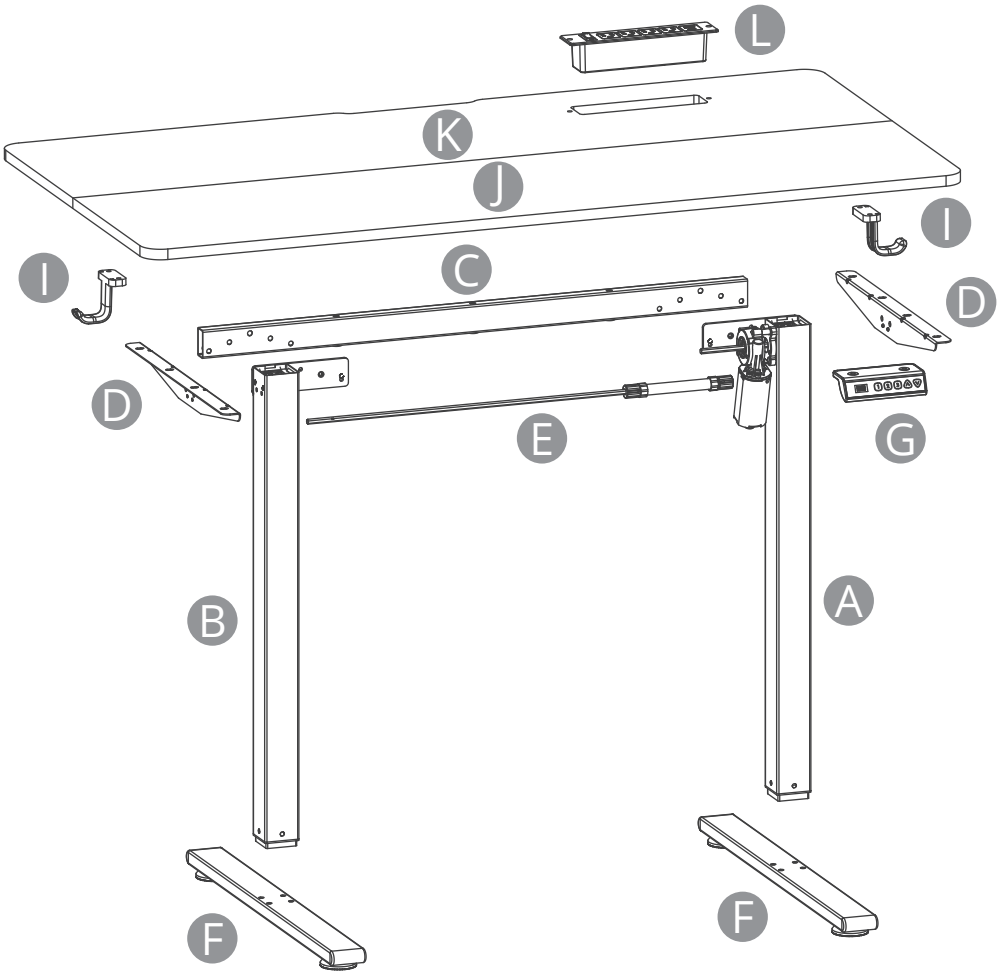

1

Note: Desktop panel screws: **5-8 N·m**. Drive screws perpendicular to the surface for a flat top and seamless panel alignment.

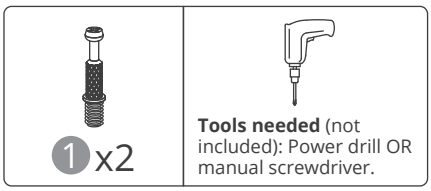

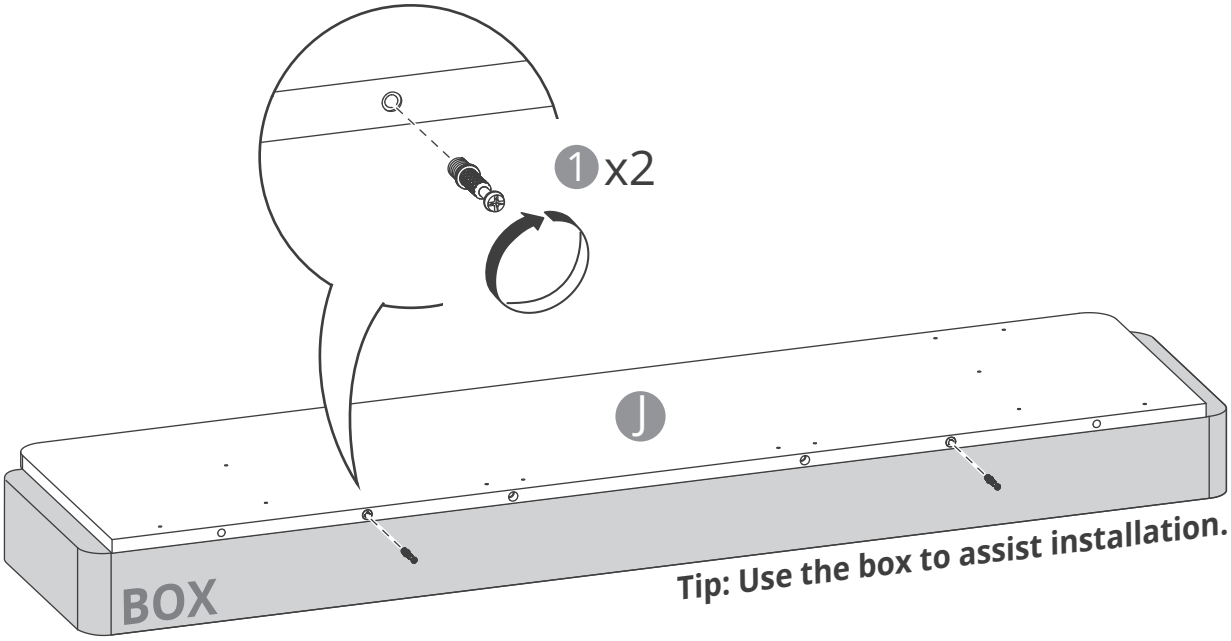

2

Note: Please place the desktop **on the carpet** for installation to prevent scratching the desktop.

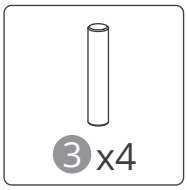

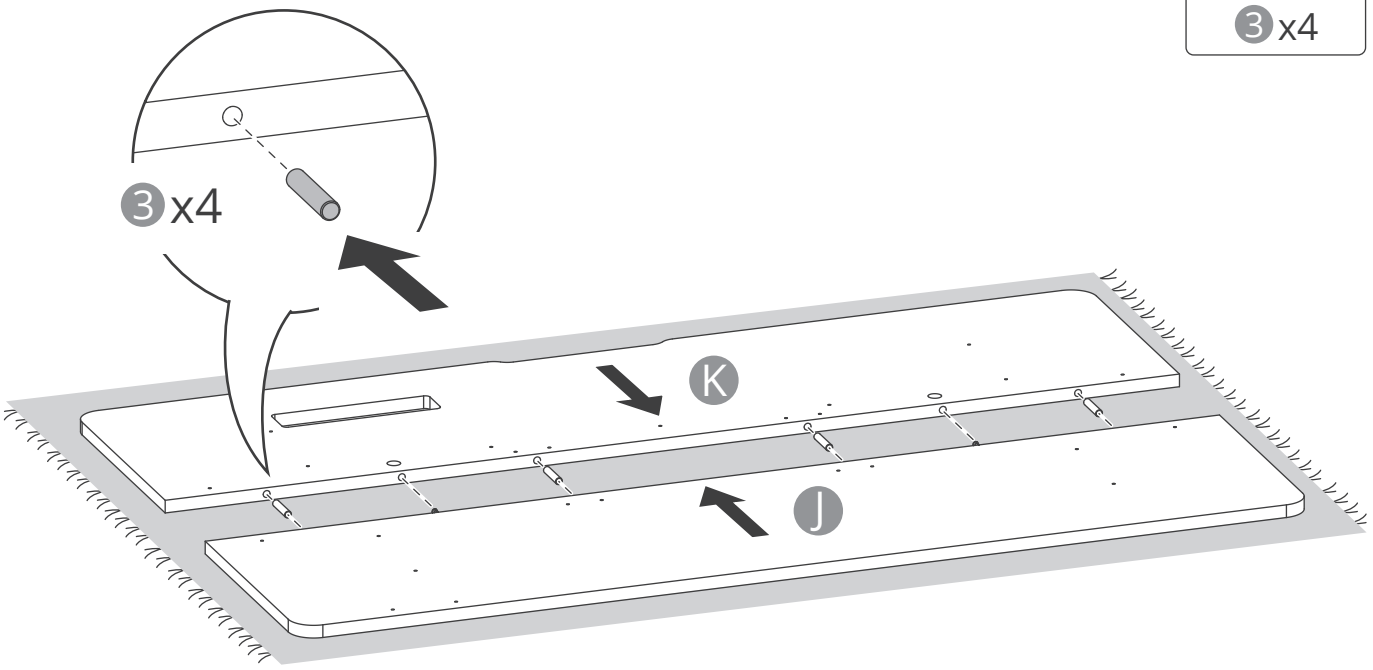

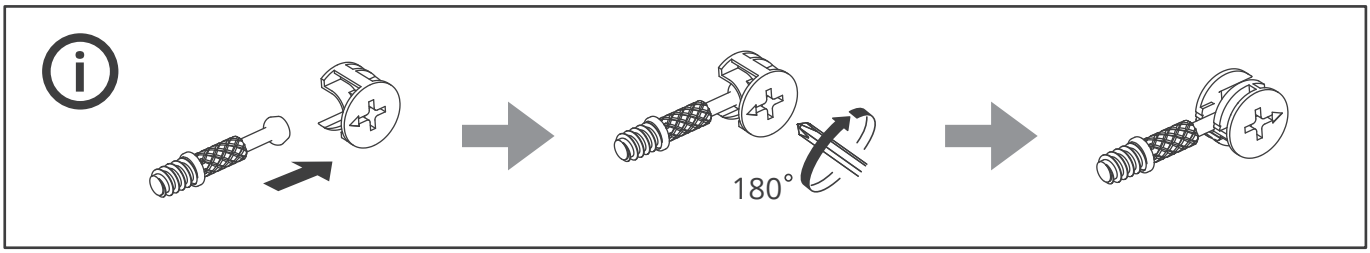

3

Note: Desktop panel screws: **5-8 N·m**. Drive screws perpendicular to the surface for a flat top and seamless panel alignment.

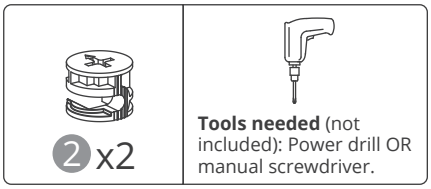

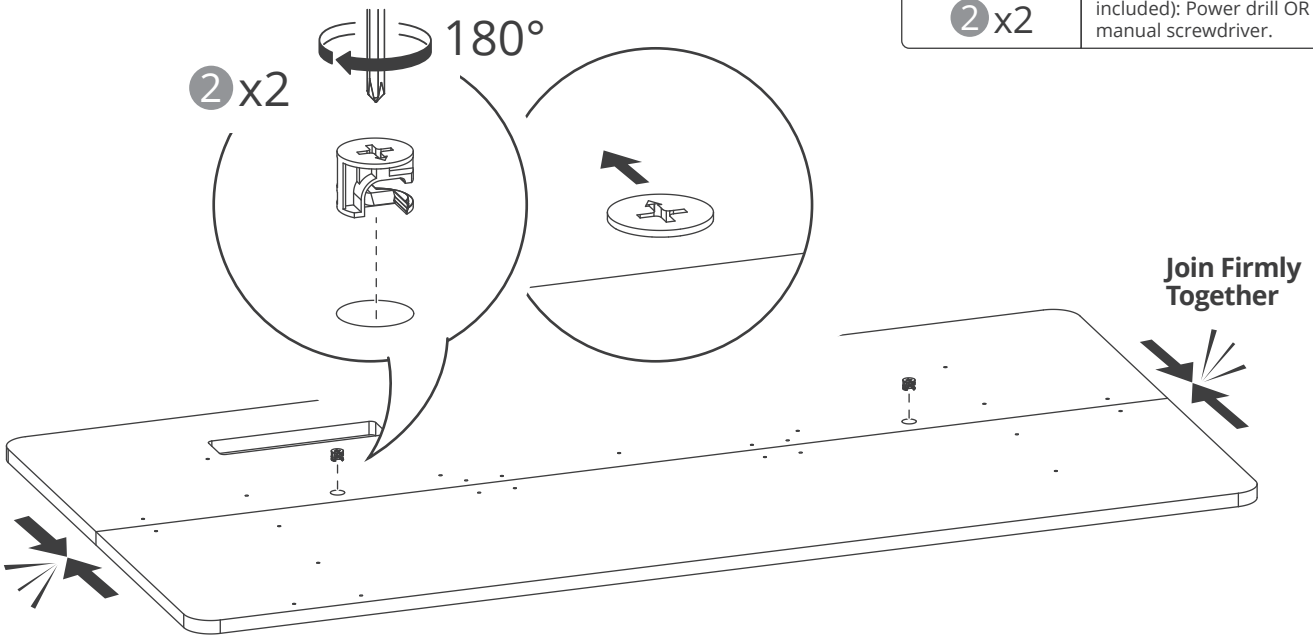

4

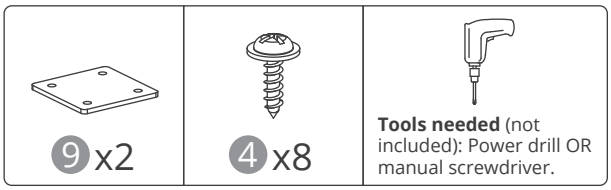

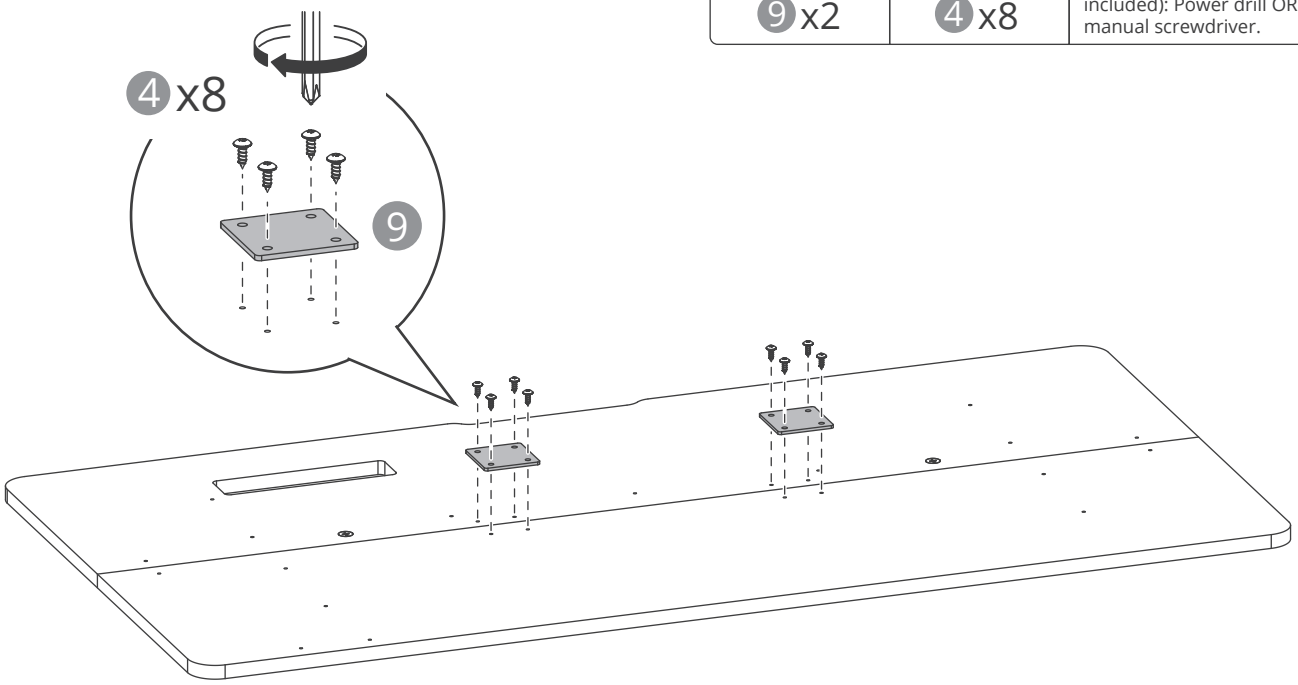

5

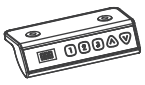 G x1	 I x2	 4 x6	 **Tools needed** (not included): Power drill OR manual screwdriver.

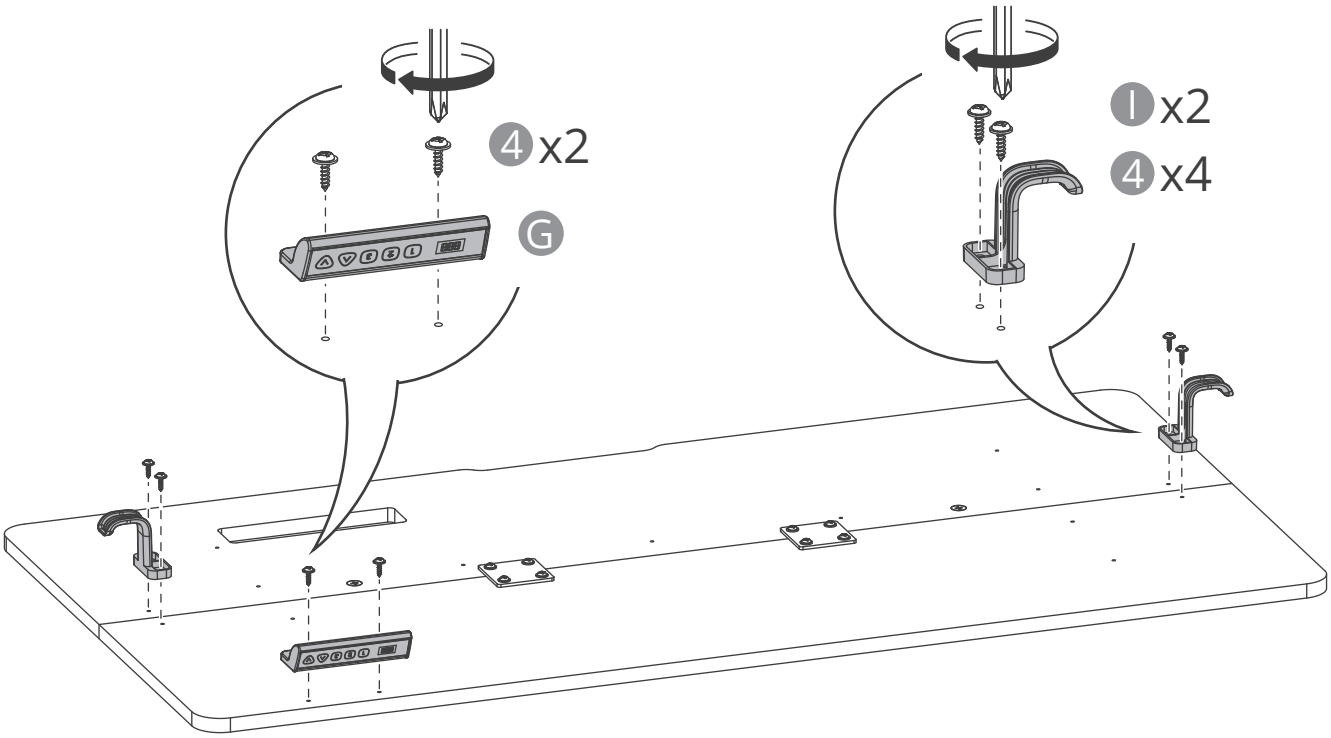

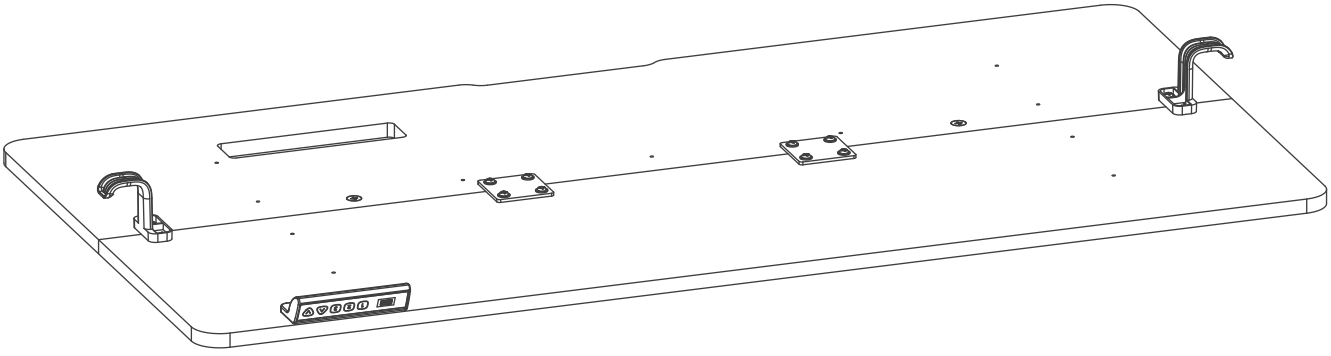

6

The recommended torque for the locking frame screws is **15 N·m**; please ensure the screws are tightened for a more stable table.

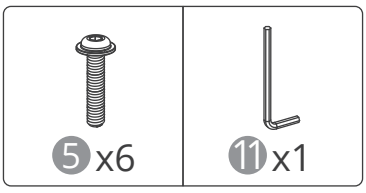

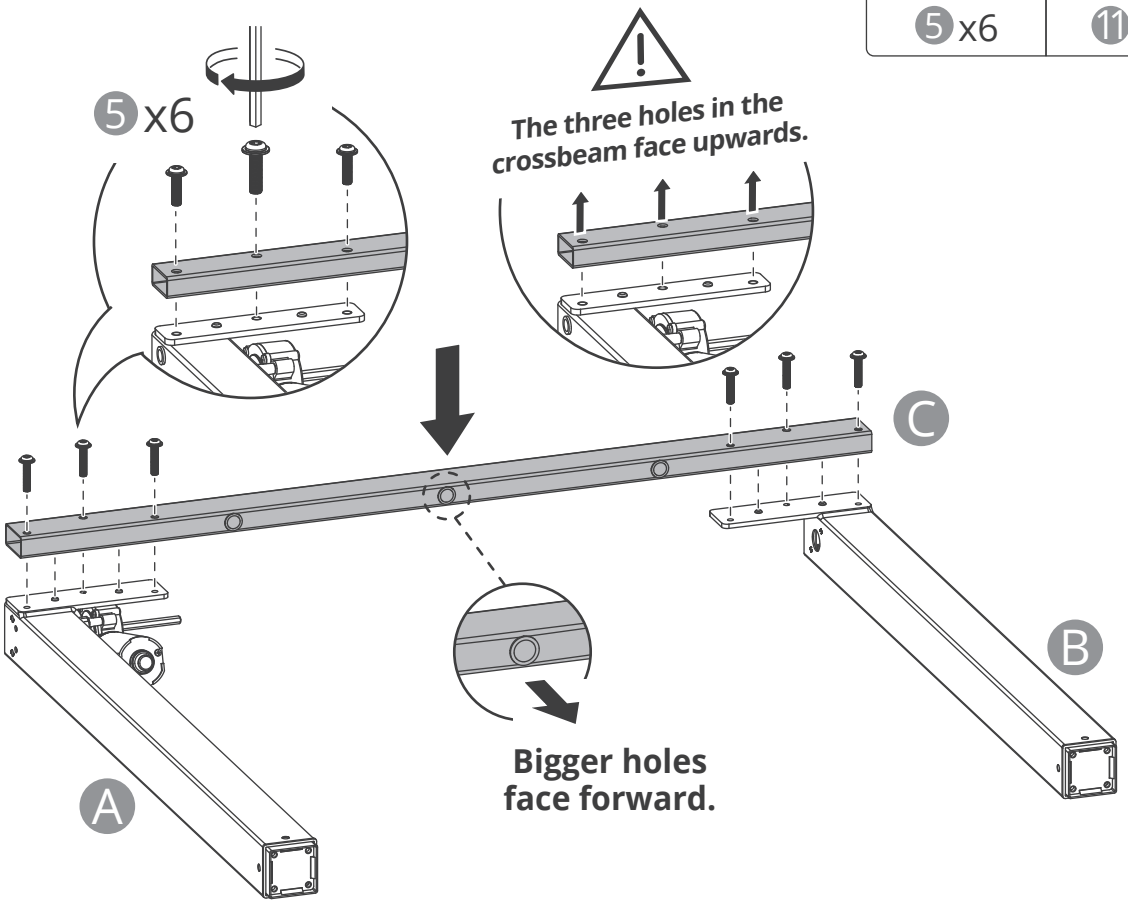

7

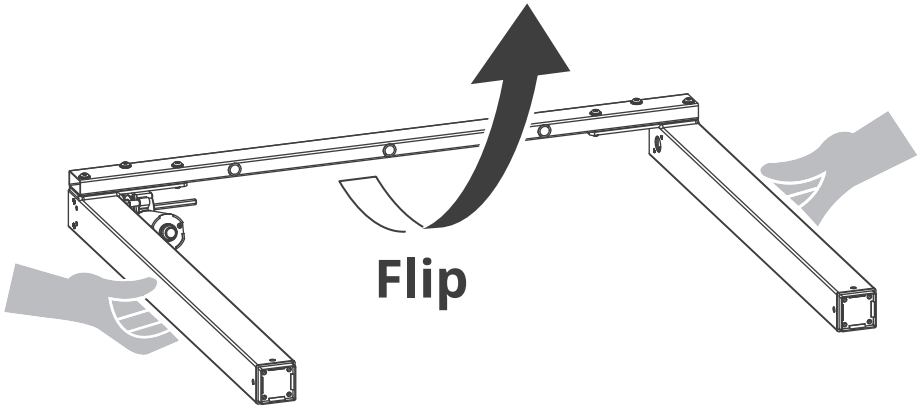



We recommend two people assist with flipping to prevent crossbar deformation.

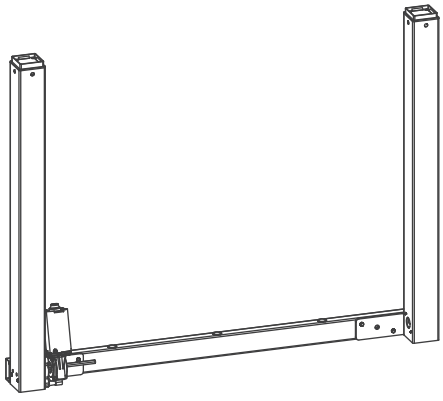

8

The recommended torque for the locking frame screws is **15 N·m**; please ensure the screws are tightened for a more stable table.

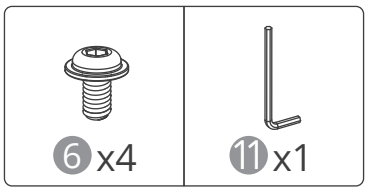

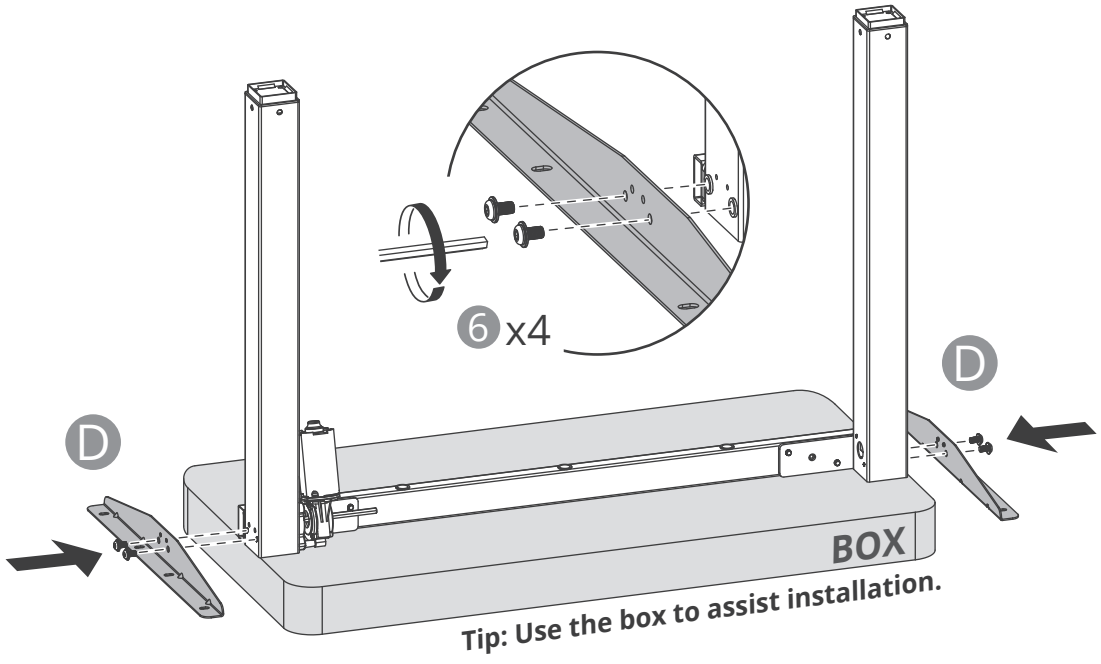

Tip: Use the box to assist installation.

9

Note: Desktop panel screws: **5-8 N·m**. Drive screws perpendicular to the surface for a flat top and seamless panel alignment.

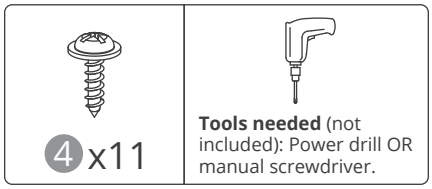

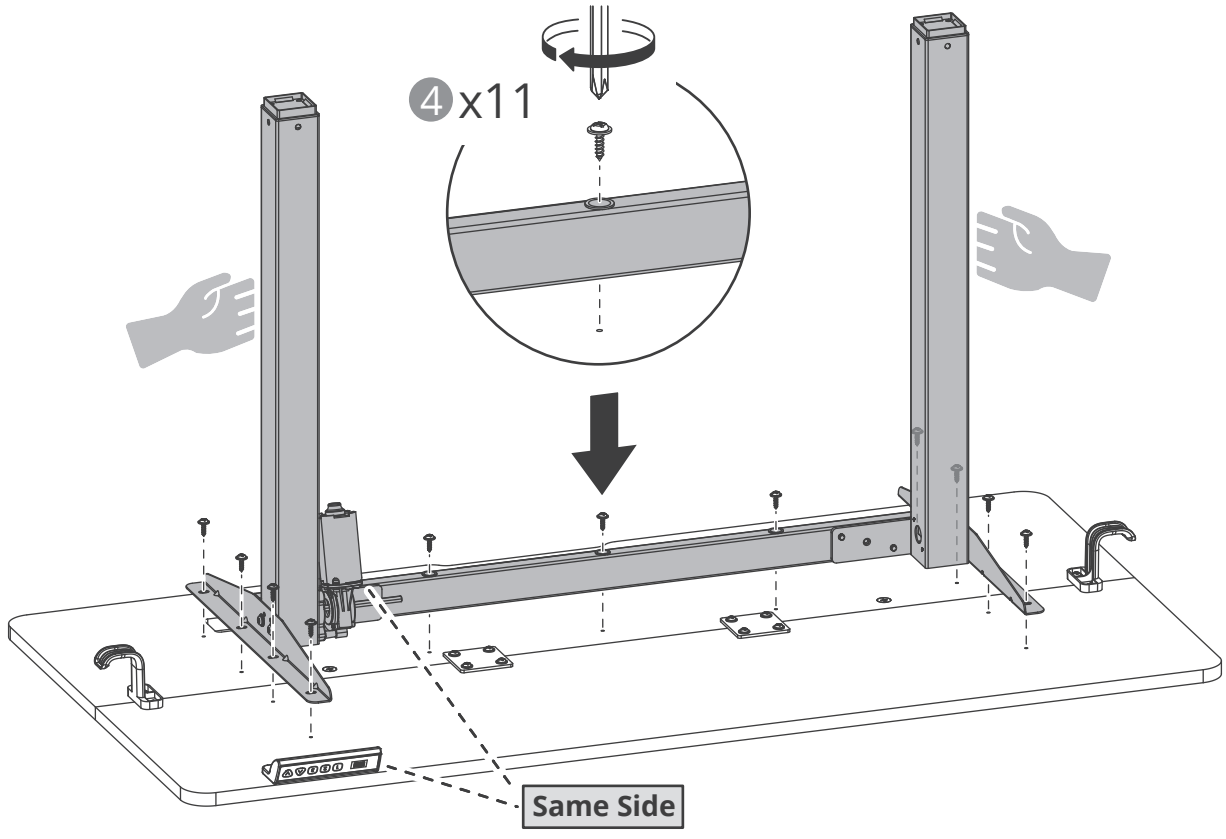

10

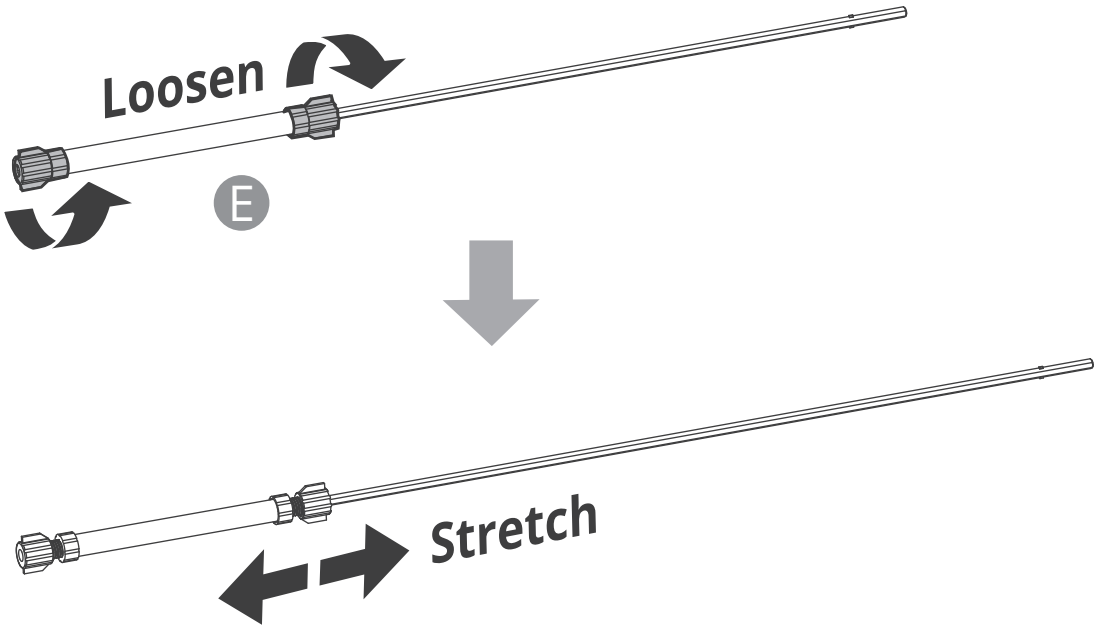

11

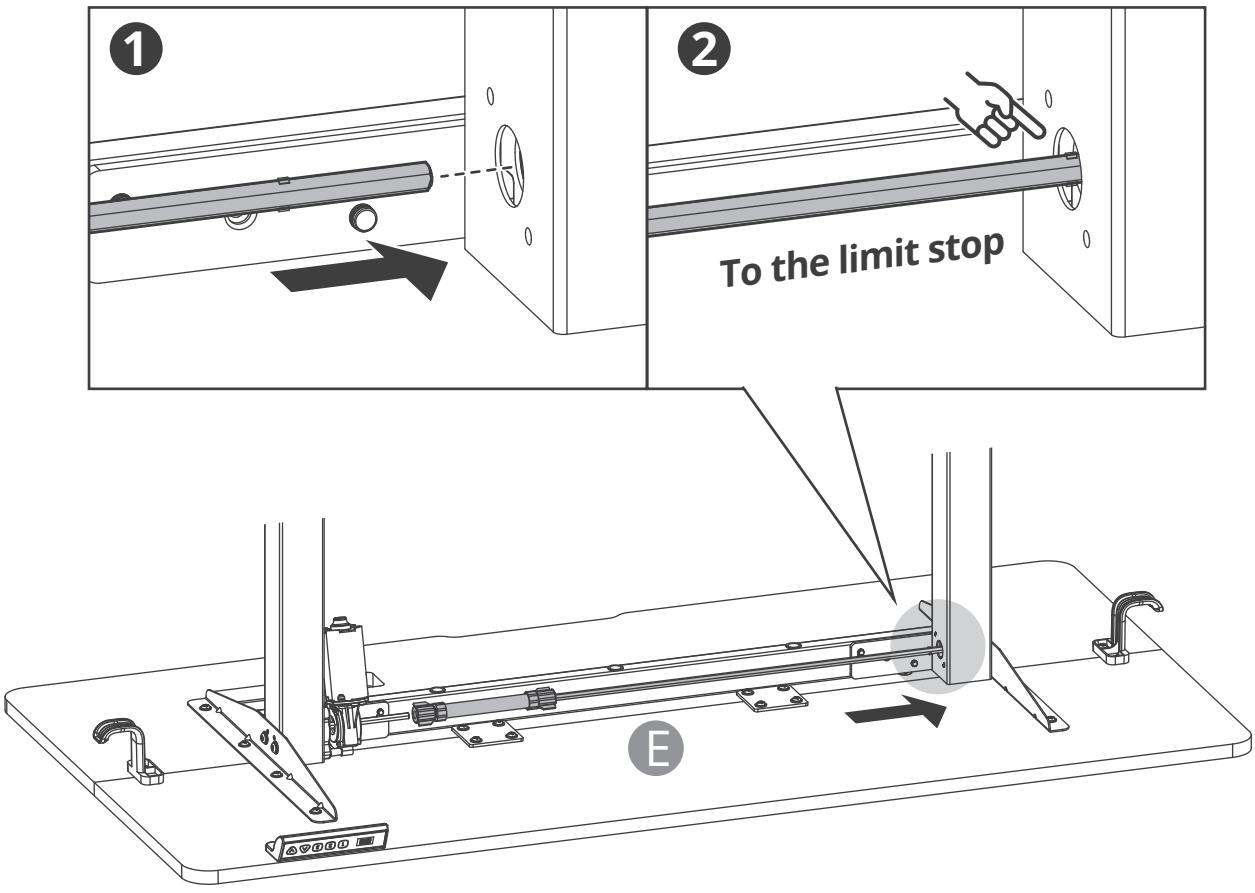

Leveling Adjustment for the Legs

1 **Ensure both legs are at the same height.**

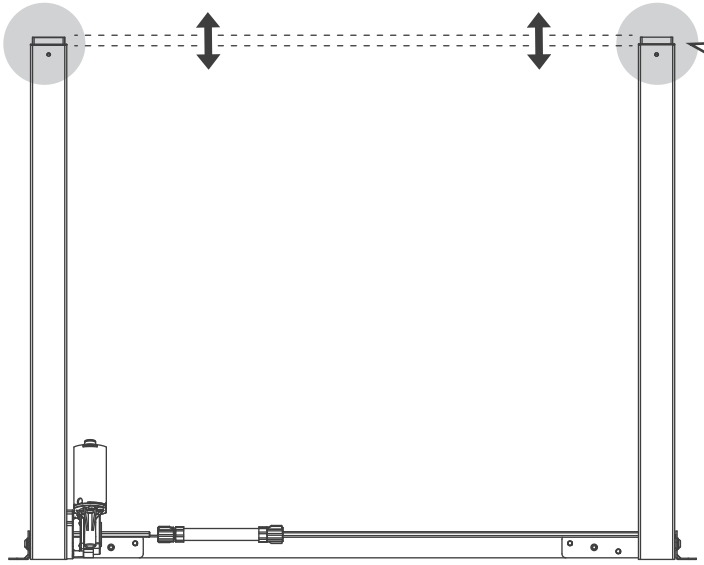

The gaps shown here must be identical, indicating horizontal alignment.

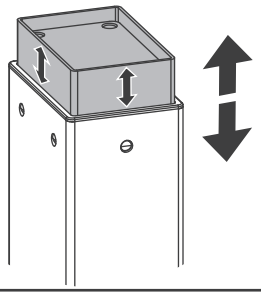

2 **Adjustment Procedure.**

Uneven Height

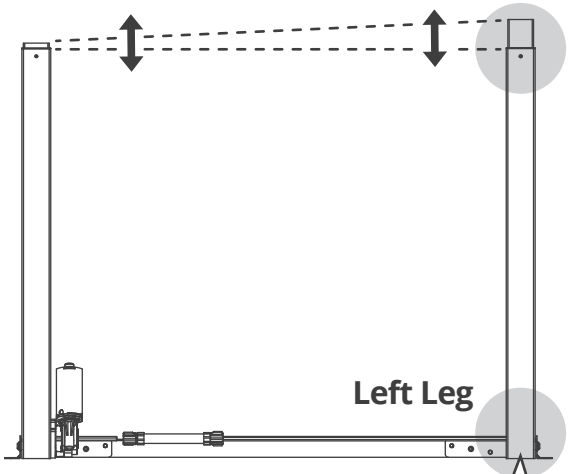

Left Leg

If the leg heights differ, **rotate the transmission rod clockwise** to align them.

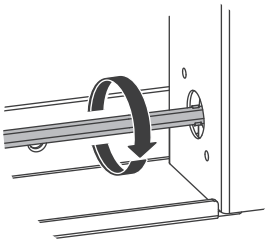

Level Aligned

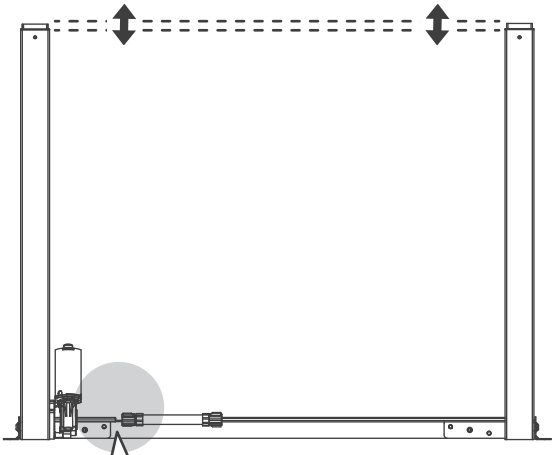

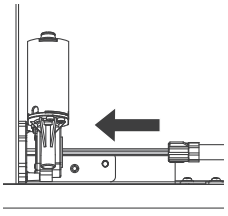

Important: Ensure both desk legs are fully lowered and completely level. Once leveled, slide the sync rod sleeve onto the sync rod on the motor side.

12

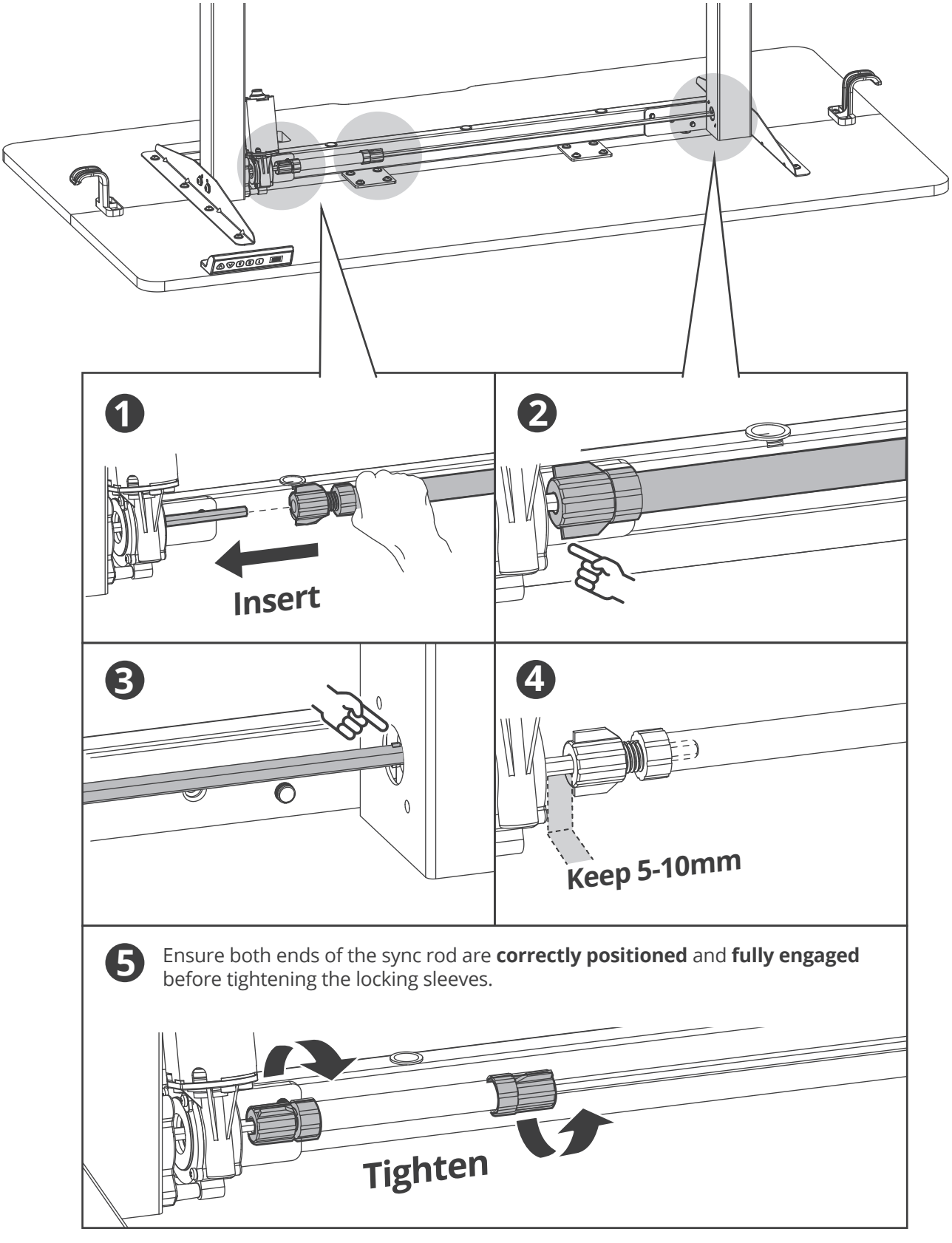
1
Insert
2
3
4
Keep 5-10mm
5
Ensure both ends of the sync rod are **correctly positioned** and **fully engaged** before tightening the locking sleeves.
Tighten

13

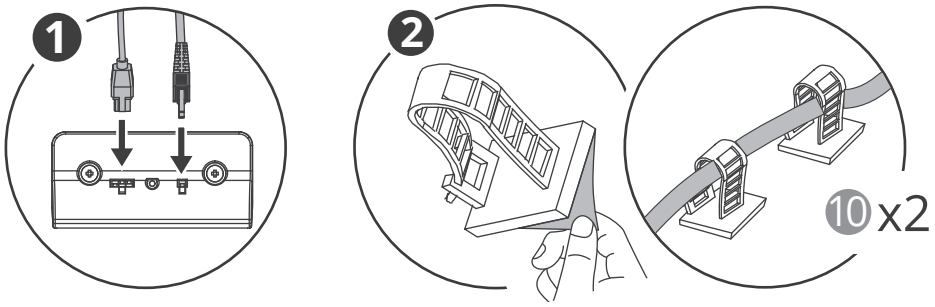

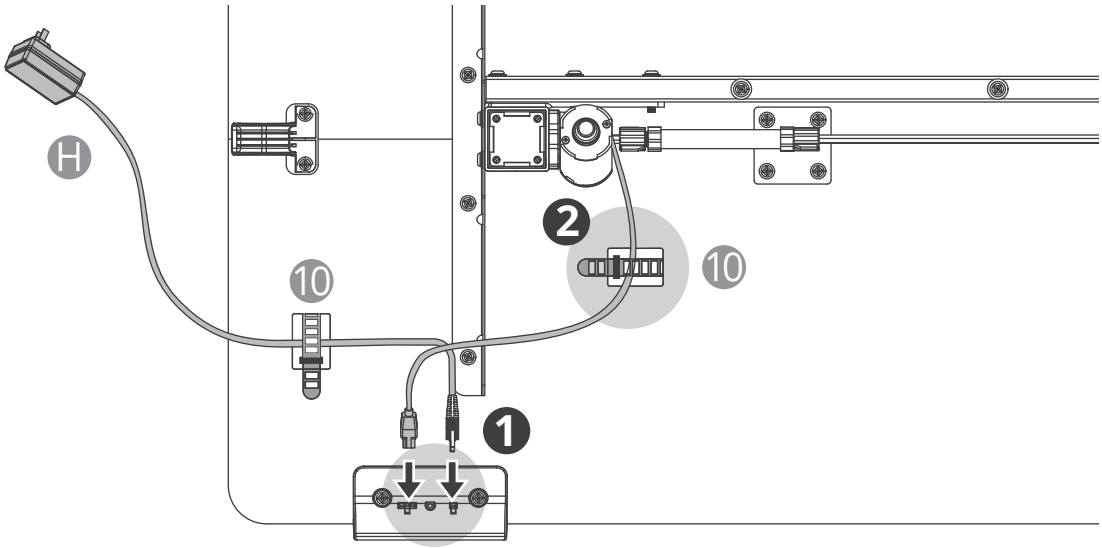

14

The recommended torque for the locking frame screws is **15 N·m**; please ensure the screws are tightened for a more stable table.

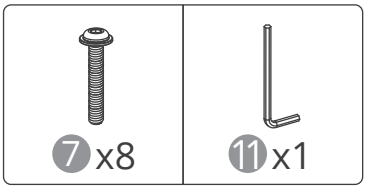

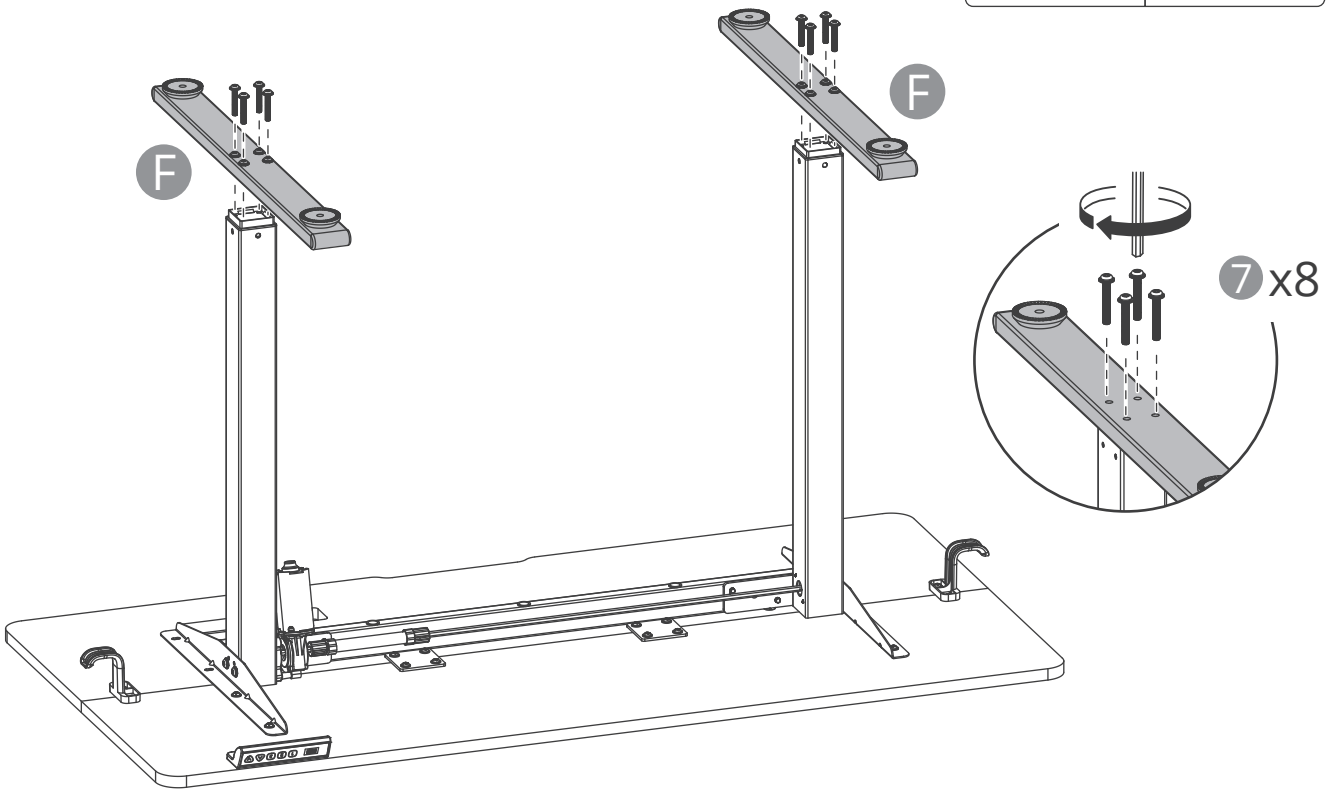

15

Note: Do not rest any weight on the keypad during the flip.

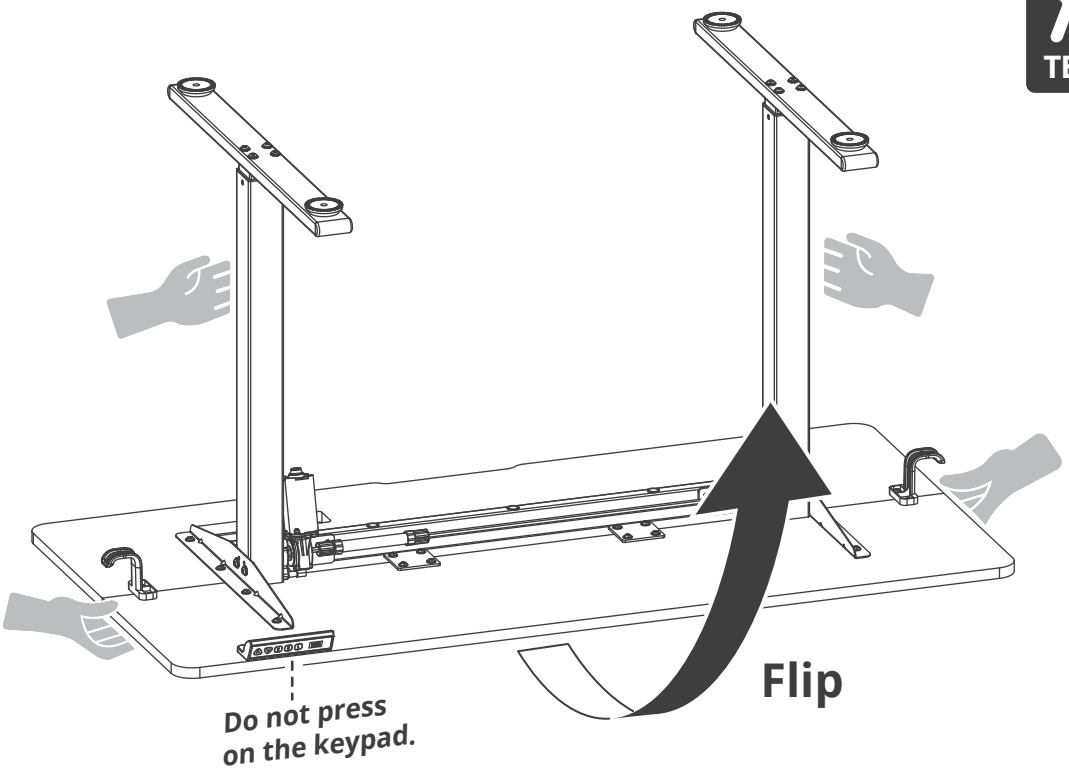

16

Note: Desktop panel screws: **5-8 N·m**. Drive screws perpendicular to the surface for a flat top and seamless panel alignment.

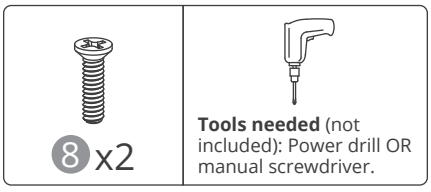

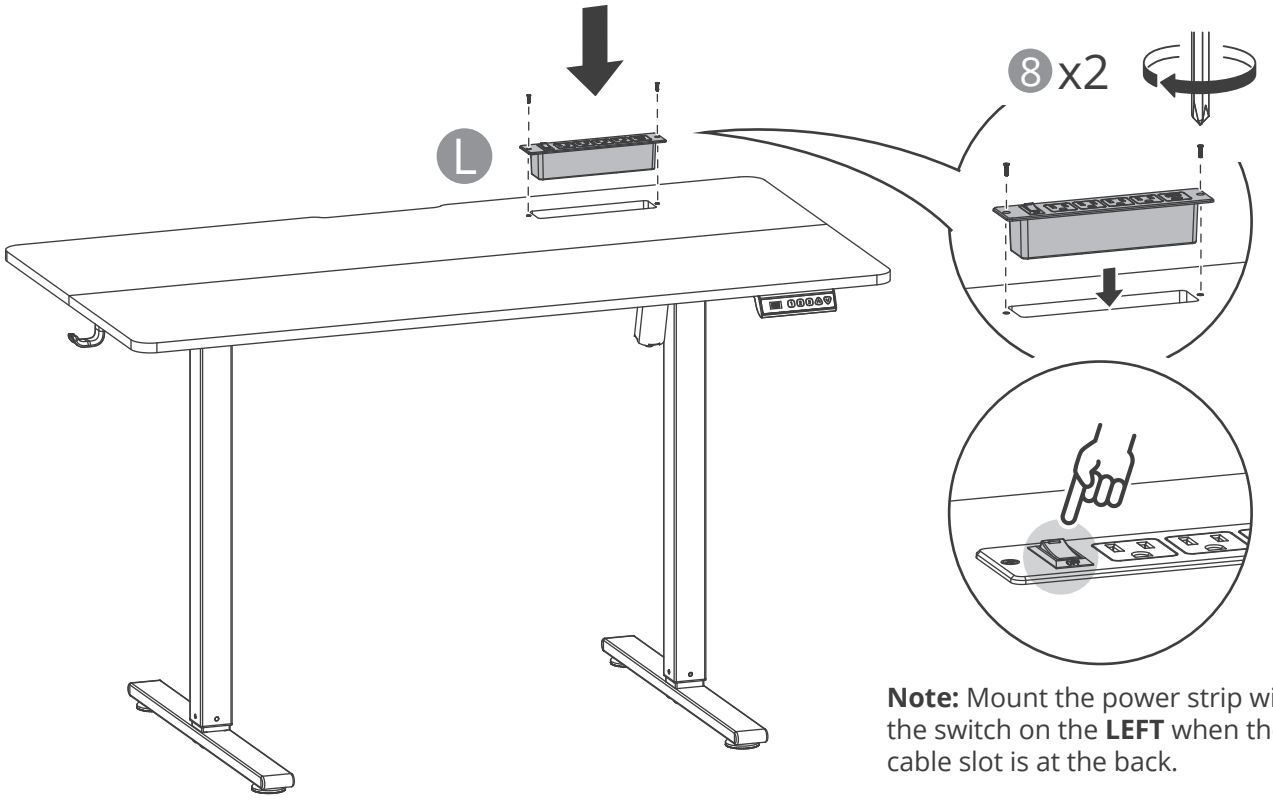

Note: Mount the power strip with the switch on the **LEFT** when the cable slot is at the back.

17

Connect the main power cord to the power strip.



You're amazing!
The installation is now complete.
Enjoy your Standing Desk!

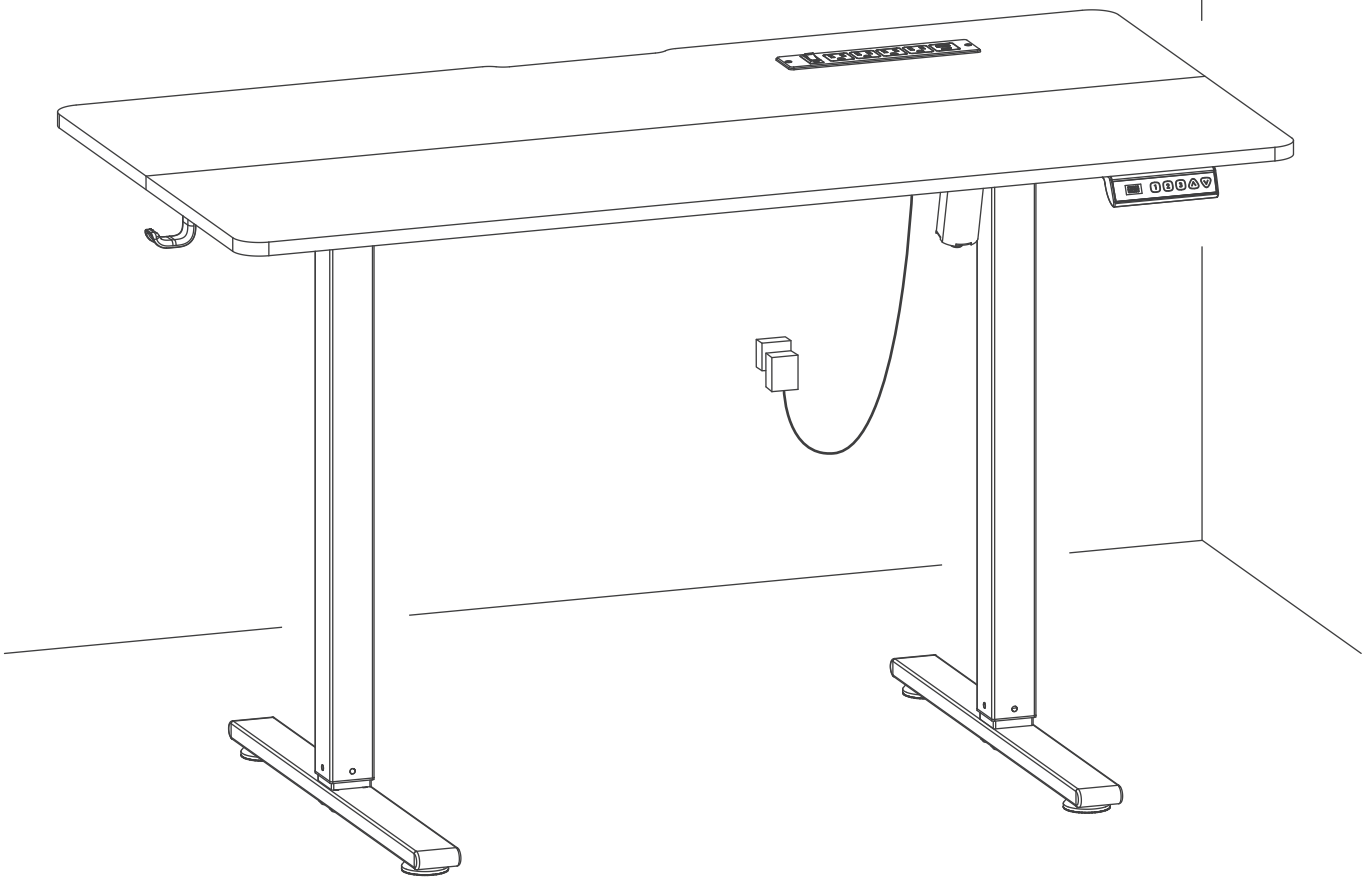

Keypad Functions and Operations

Setting and Recalling Memory Presets

This feature allows you to save specific desk heights for quick, one-touch access.



To Save a Memory Preset:

1. Adjust the desk to your desired height.
2. Press and hold the **1** button for three seconds. The display will show S-1 to confirm the current height has been saved to preset **1** .
3. Follow the same steps for the **2** and **3** buttons to save other presets.

To Recall a Memory Preset:

Briefly press the **1** , **2** , or **3** button. The desk will automatically adjust to the corresponding saved height.

Collision Protection



This feature detects obstacles when the desk is in motion to reduce the risk of damage or injury. The desk will stop and reverse slightly if a collision occurs.

To adjust the sensitivity:

Press and hold the **1** and **2** buttons together for 2 seconds. You can cycle through four sensitivity levels: **Off**, **L** (Low), **N** (Normal), and **H** (High).

Child Lock



This function locks the keypad to prevent unintended operation.

- To Activate: Press and hold the **1** and **3** buttons simultaneously for 5 seconds. The display will show LOC , and the keypad will be locked.

- To Deactivate: Press and hold the **1** and **3** buttons again for 5 seconds. The display will return to showing the current height.

System Reset



A reset may be required if the display shows an error code (e.g., Er1 , E20) or if the desk is unresponsive.

1. Press and hold the V button for at least 3 seconds.
2. Release the button when the display shows rST .
3. The desk will automatically lower to its lowest position and then rise slightly.
4. The reset is complete when the display shows the minimum height.

Error Codes and Troubleshooting	
Handset displays "E02"	**Collision Protection** This error appears if the desk experiences significant vibration, collides with an object, or becomes tilted during movement. The desk will stop and reverse automatically. **Solutions** 1. The error should clear automatically. You can also press any button during the reversal to stop and clear the code. Before using the desk again, CHECK for and REMOVE any obstacles. ENSURE the desk is on a level surface. 2. If the problem persists, please take a video of the issue and contact after-sales support at support@yfs.life.
Handset displays "Hot"	**Overheat Protection** This error can be triggered by continuous, prolonged operation of the motor. **Solutions** 1. STOP using the desk and let it cool down for at least 18 minutes before resuming operation. 2. If the problem persists, please take a video of the issue and contact after-sales support at support@yfs.life.
Handset displays "Er1"	**Motor Error** A motor connection issue has been detected. **Solutions** 1. DISCONNECT the desk from the power outlet. 2. CHECK that all motor cables are securely connected to the control box. 3. RECONNECT the power cord. 4. PERFORM a System Reset. 5. If the problem persists, please take a video of the issue and contact after-sales support at support@yfs.life.
Handset displays "E20"	**Overload Protection** The weight on the desktop exceeds the maximum load capacity. **Solutions** 1. REMOVE some weight from the desktop. If the error appeared while the desk was moving down, you may also need to disconnect and then reconnect the power after removing the excess weight. 2. If the problem persists, please take a video of the issue and contact after-sales support at support@yfs.life.

Handset displays "E31"	**Undervoltage Protection** The input voltage from the power source is too low. **Solutions** 1. DISCONNECT the desk from the power outlet. 2. CHECK that the power cord is securely connected to both the wall outlet and the control box. 3. RECONNECT to a stable power source. 4. If the problem persists, please take a video of the issue and contact after-sales support at support@yfs.life.
Handset displays "E32"	**Overvoltage Protection** The input voltage from the power source is too high. **Solutions** 1. DISCONNECT the desk from the power outlet. 2. CHECK that your power source is compatible with the desk's electrical requirements. 3. RECONNECT to a proper power source. 4. If the problem persists, please take a video of the issue and contact after-sales support at support@yfs.life.

Looking for help?

We’re Here For You!

support @yfs.life

For assembly assistance,You can send us emails.

Please keep this manual for after-sales use.