ASSEMBLY INSTRUCTIONS

48” Desktop

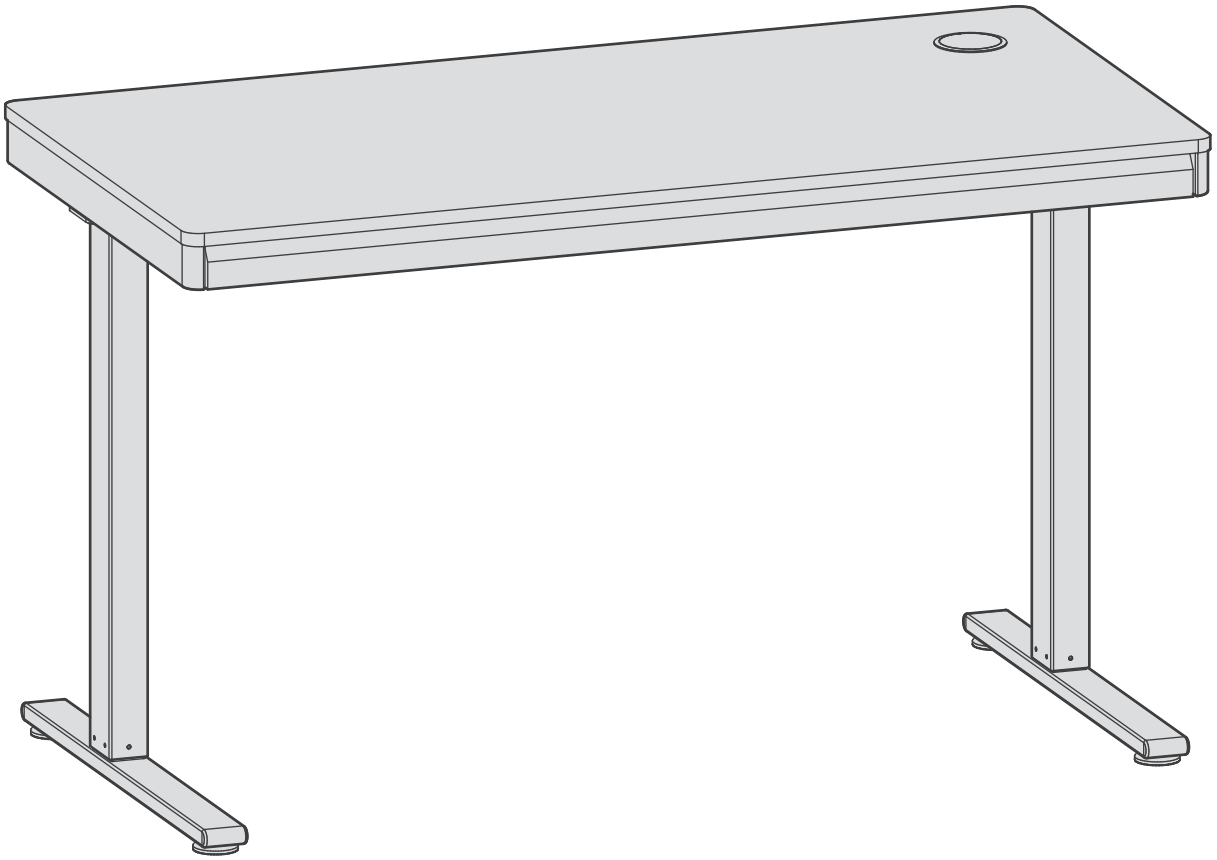

Scan QR code for installation video

support@yfs.life

yfs.life/sde0239-zpa-ryi2-0

Caution

- Keep children and animals away from the desk during use. Ensure the desktop is not touching any walls.
- Remove obstacles taller than 20 "/51 cm from underneath the desk.
- Operate only in a working environment temperature of 32 °F -104 °F/0 °C - 40 °C.
- Keep product away from corrosive gases, liquids and dusty objects.
- Keep hands, feet and other body parts in a safe position during operation. Anti-collision is not automatically enabled when reset.
- The company does not bear any warranty or liability for damage and human injury caused by any abnormal or un-intended operation of the equipment.
- It is necessary to perform a manual reset after the initial installation or power cycling the equipment.

Safety Warnings

- Do not overload the power outlets. Ensure the total power consumption does not exceed 1500W of the outlets.
- Avoid using the desk in humid environments to prevent electric shock or short circuits.
- Regularly inspect the power cords and outlets. If any damage is found (e.g. cracks, looseness, or burn marks), stop using the product immediately and contact a professional for repair or replacement.
- Do not unplug an electrical appliance by pulling its flexible power cord. Otherwise, it may damage the wire connection and cause danger.
- Do not spill food or liquids on the outlets.
- Place the desk where children cannot easily access the power outlets.
- Use childproof outlet covers to prevent accidental contact by children.
- Educate children not to climb on or pull the desk to avoid accidents.

Customer Service

30-Day Easy Returns

If your purchase isn't the right fit, you can return it within the 30-day return window.

Reliable Warranty

2-Year Warranty for Motor & Electronics
5-Year Warranty for Desk Frame & Structural Components

24x7h Support

Simple email us at **support@yfs.life**.
Our support team typically responds within **24x7 hours**.

Pre-Installation Preparation

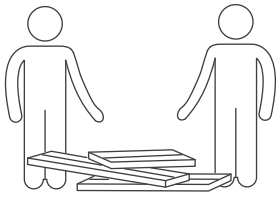 Complete through collaboration.	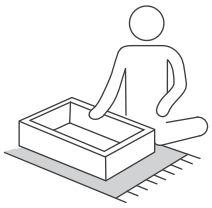 Assemble on a clean, flat, and protective surface.	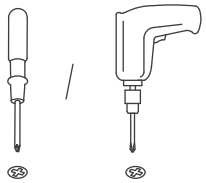 Phillips screwdriver or drill required (not provided).	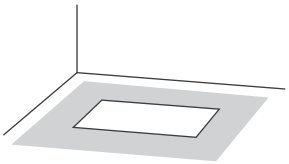 Allow an assembly area at least twice the desktop size.

PARTS LIST

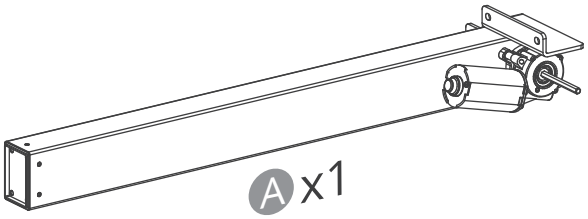

A x1

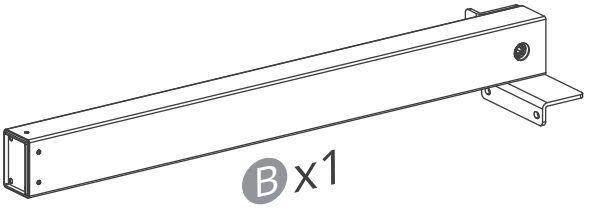

B x1

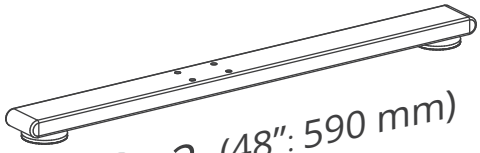

C x2 (48″: 590 mm)

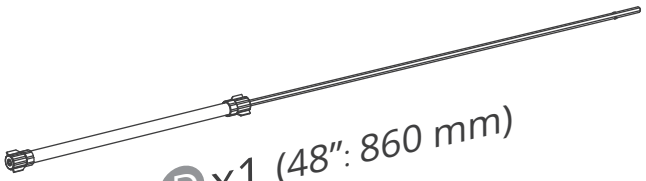

D x1 (48″: 860 mm)

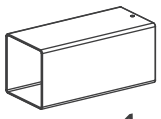

E x1

Clamp Tube

(prepare for the installation of the monitor arm)

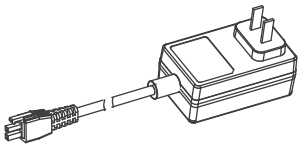

G x1

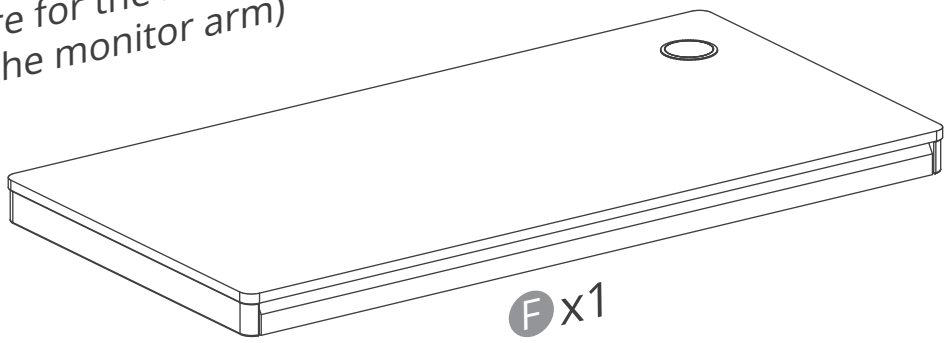

F x1

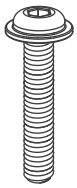

1 x(3+1)
M6x60

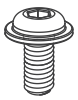

2 x(8+1)
M6x12

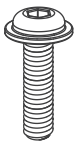

3 x(8+1)
M6x35

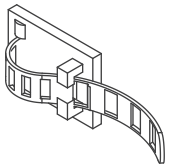

4 x2

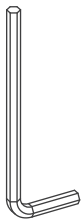

5 x1
4mm

EXPLODED VIEW DIAGRAM

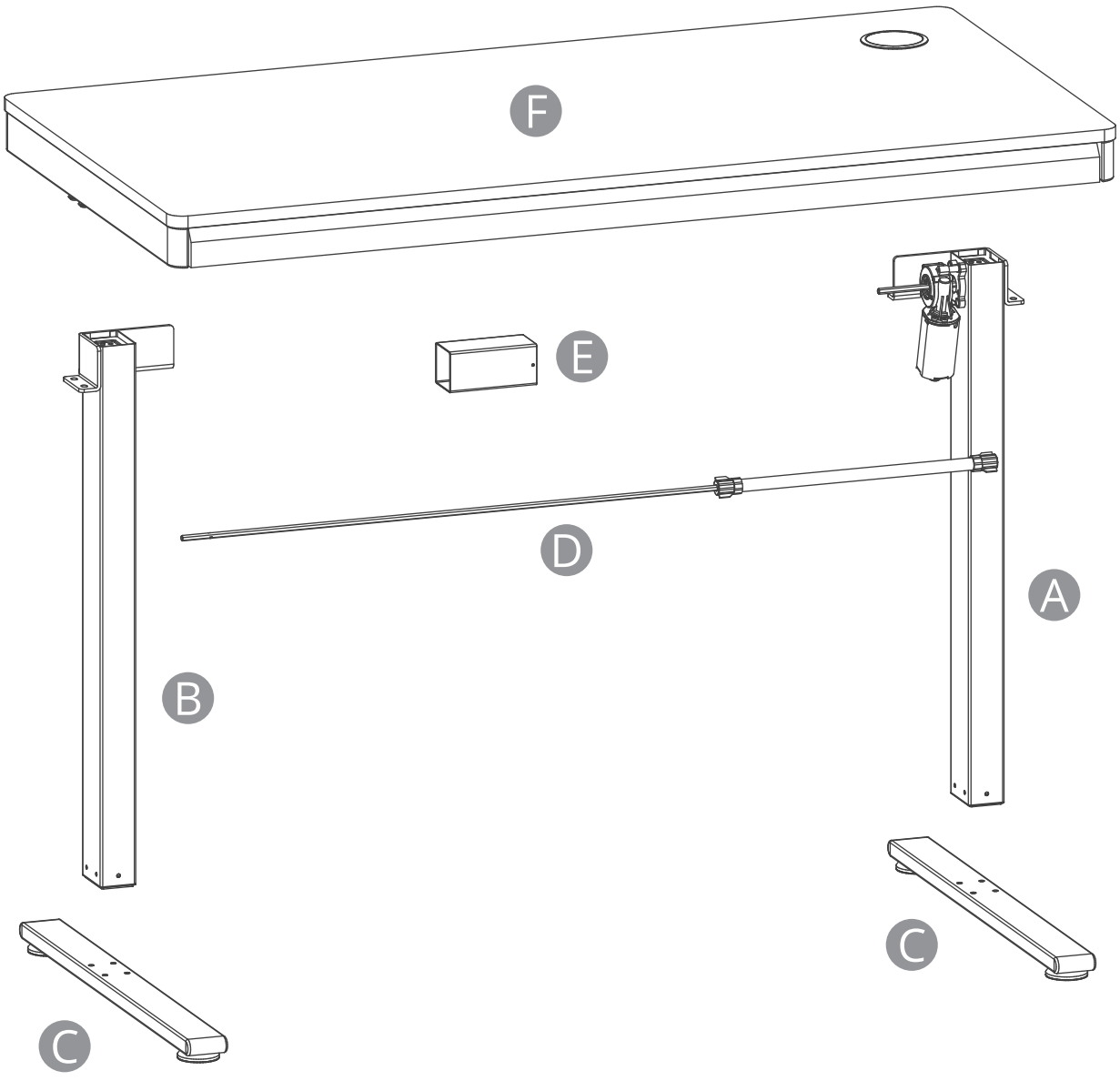

1

Note: Please place the desktop **on the carpet** for installation to prevent scratching the desktop.

Desktop Attachment: Drive screws vertically to **5-8 N·m**. Keep them straight to ensure a flush, seamless desktop.

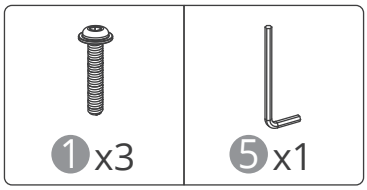

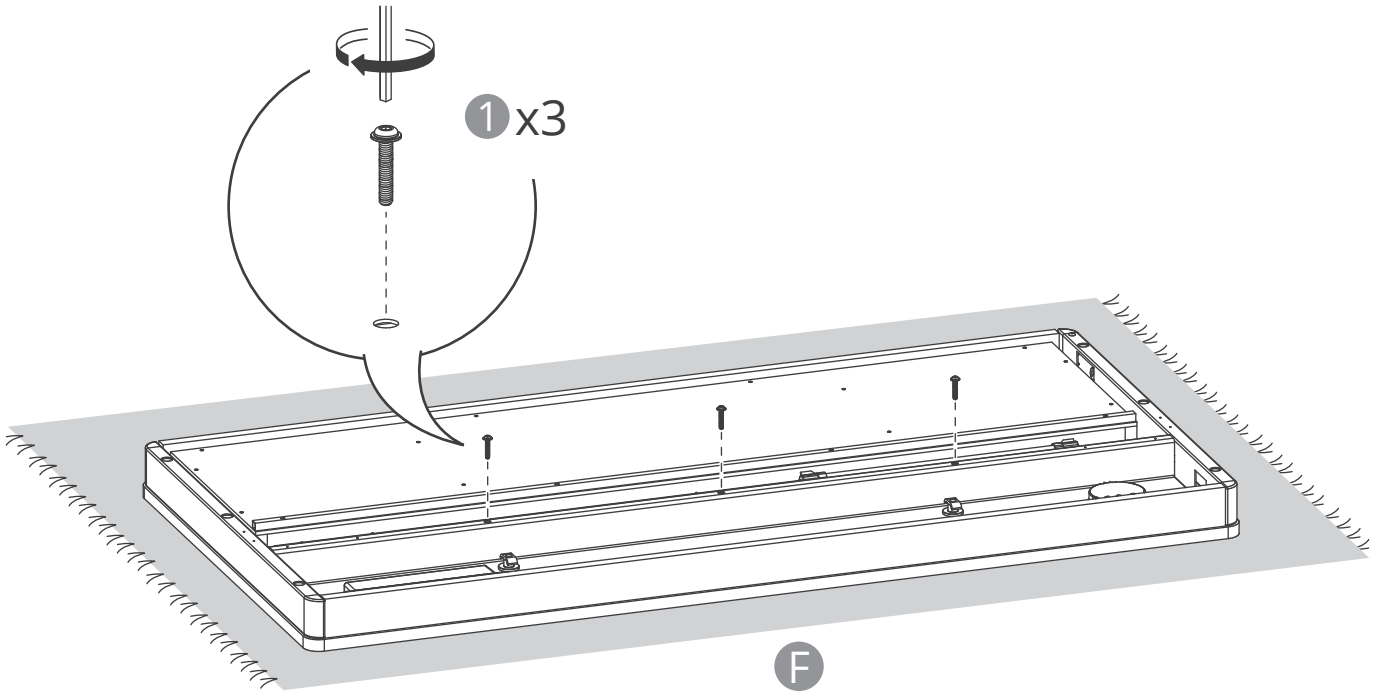

2

The recommended torque for the locking frame screws is **15 N·m**; please ensure the screws are tightened for a more stable table.

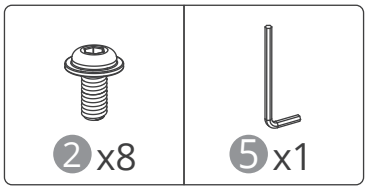

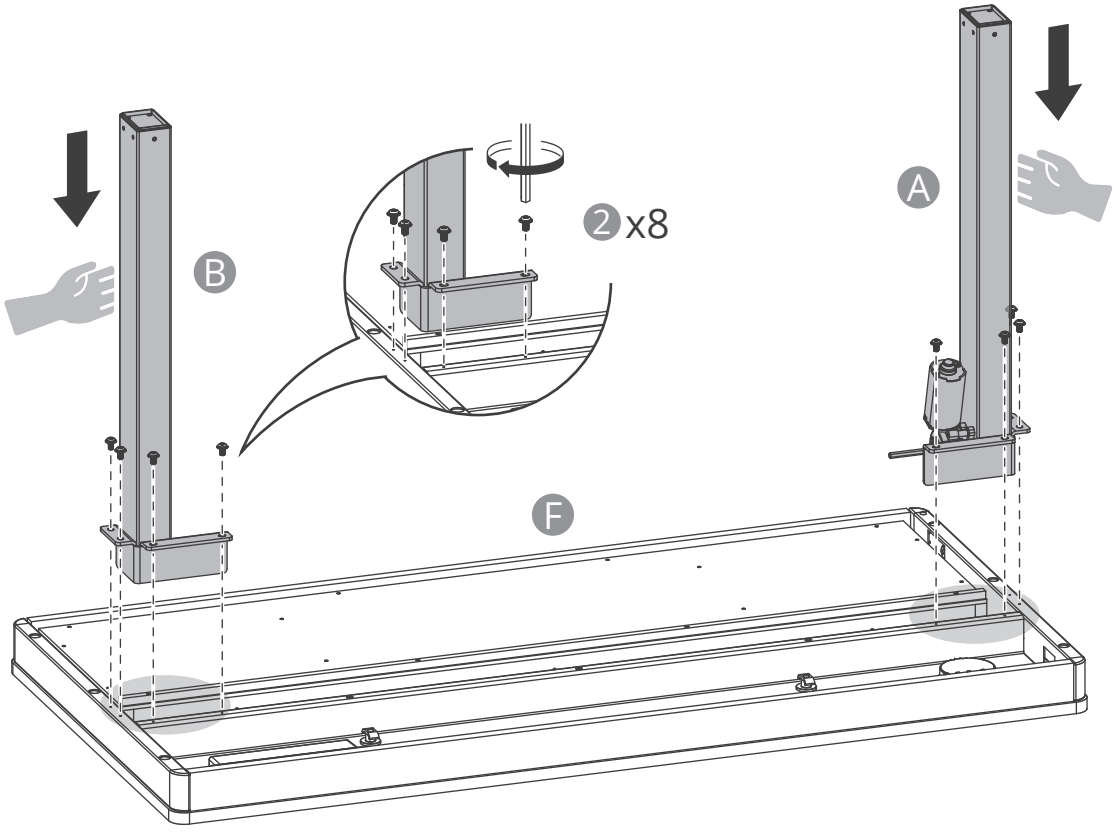

3

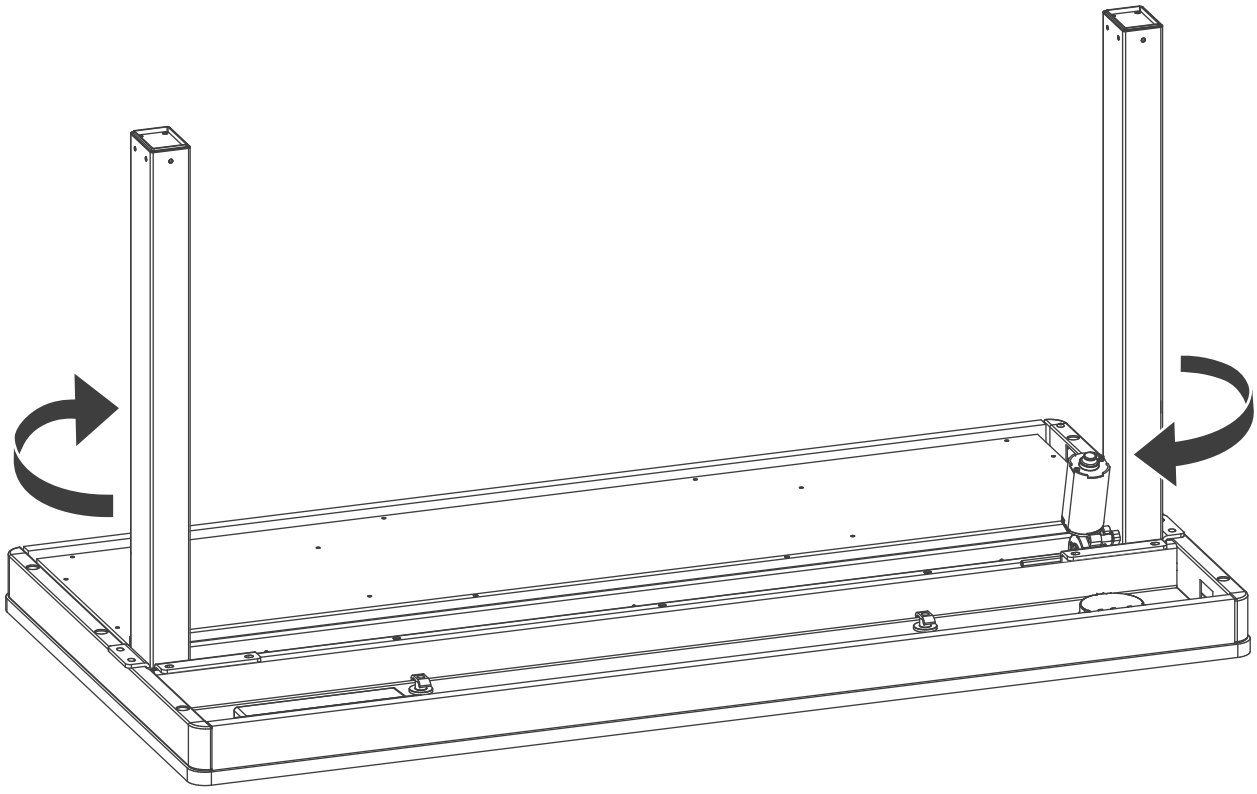

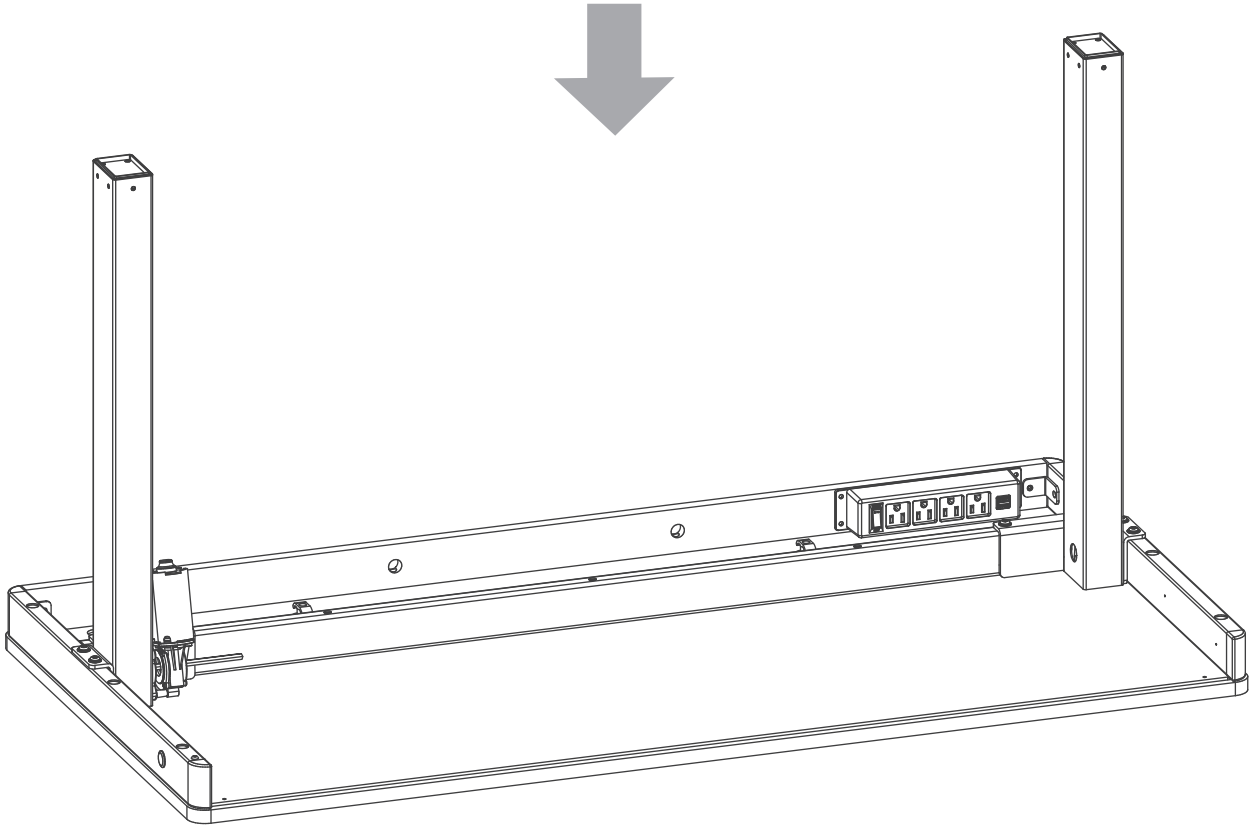

4

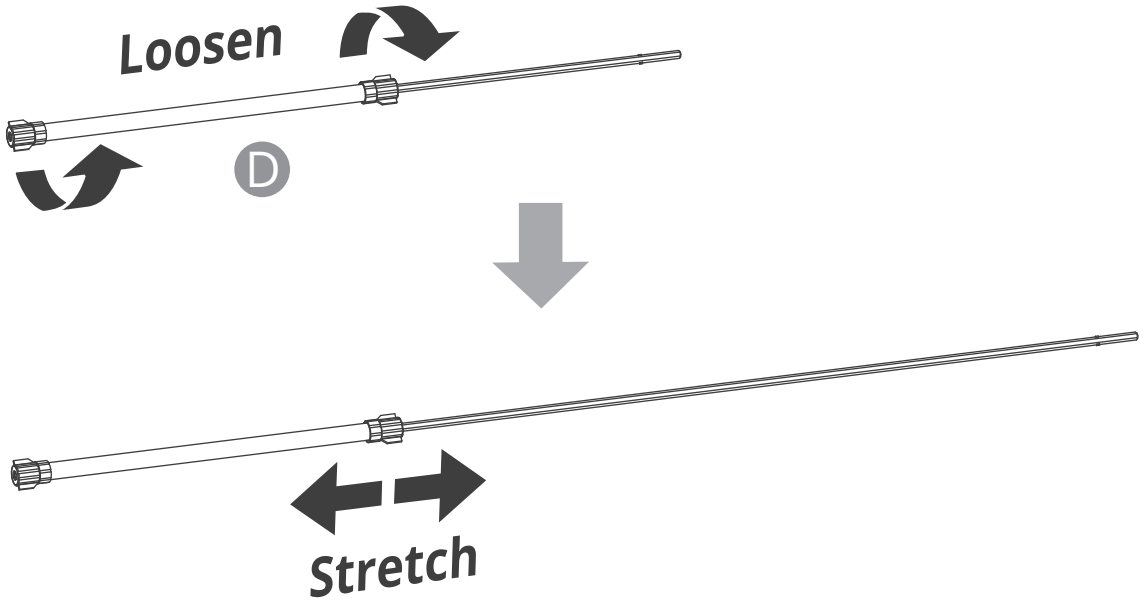

5

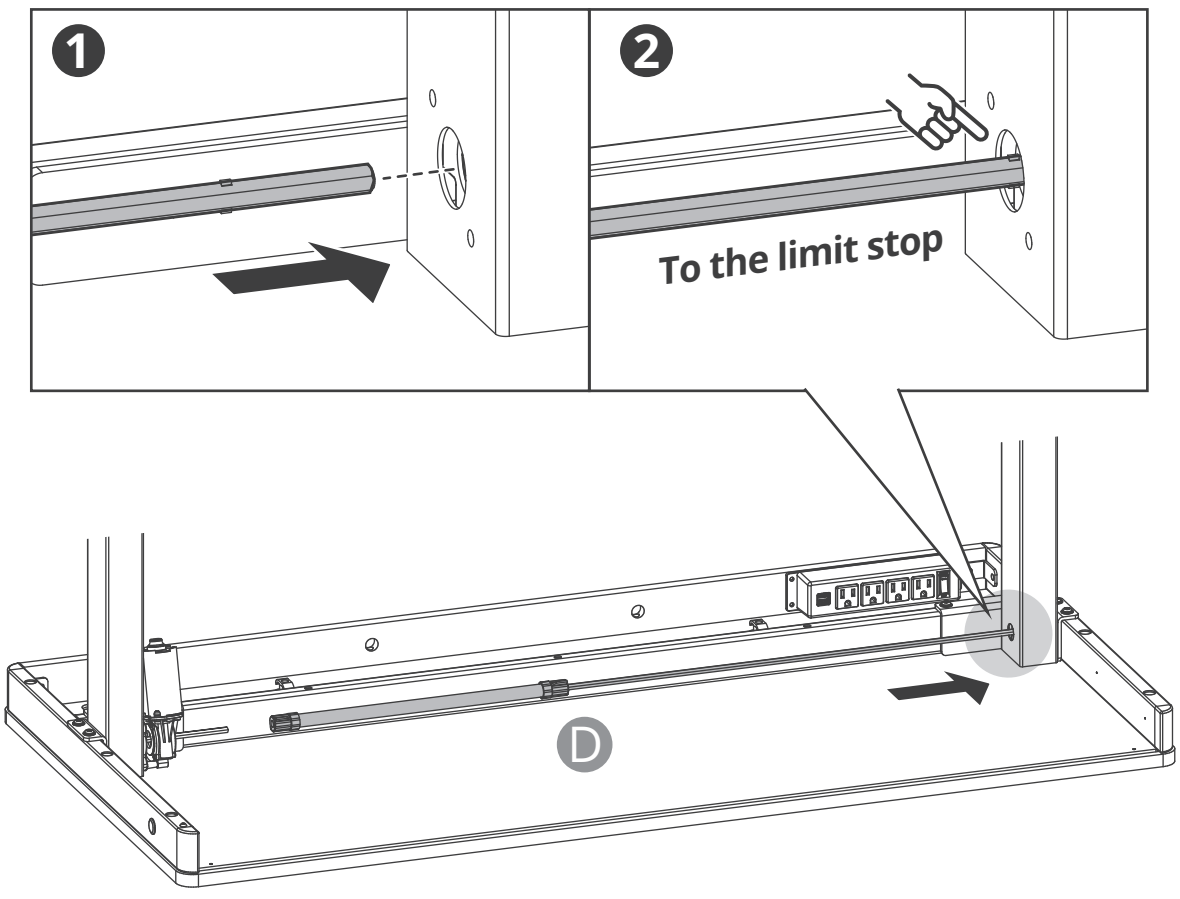

Leveling Adjustment for the Legs

1 **Ensure both legs are at the same height.**

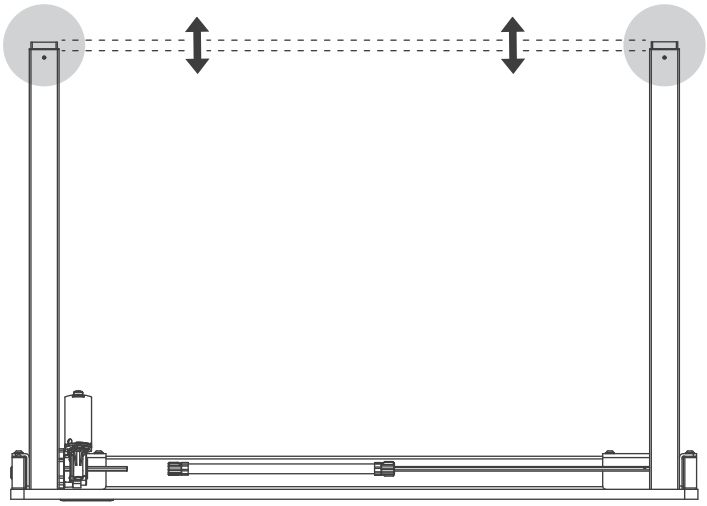

The gaps shown here must be identical, indicating horizontal alignment.

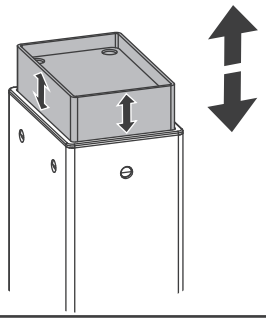

2 **Adjustment Procedure.**

Uneven Height

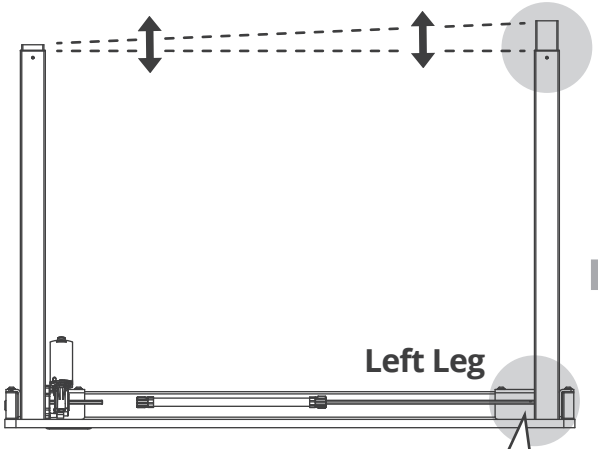

If the leg heights differ, **rotate the transmission rod** to align them.

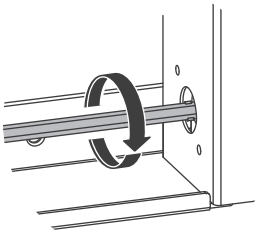

Level Aligned

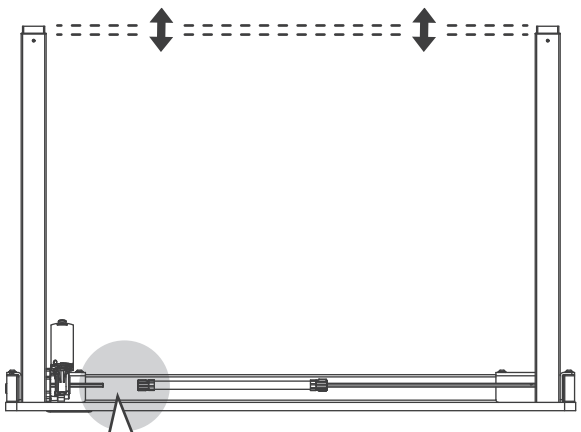

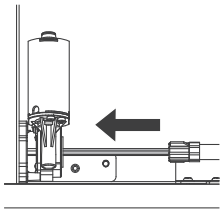

Important: Ensure both desk legs are fully lowered and completely level. Once leveled, slide the sync rod sleeve onto the sync rod on the motor side.

6

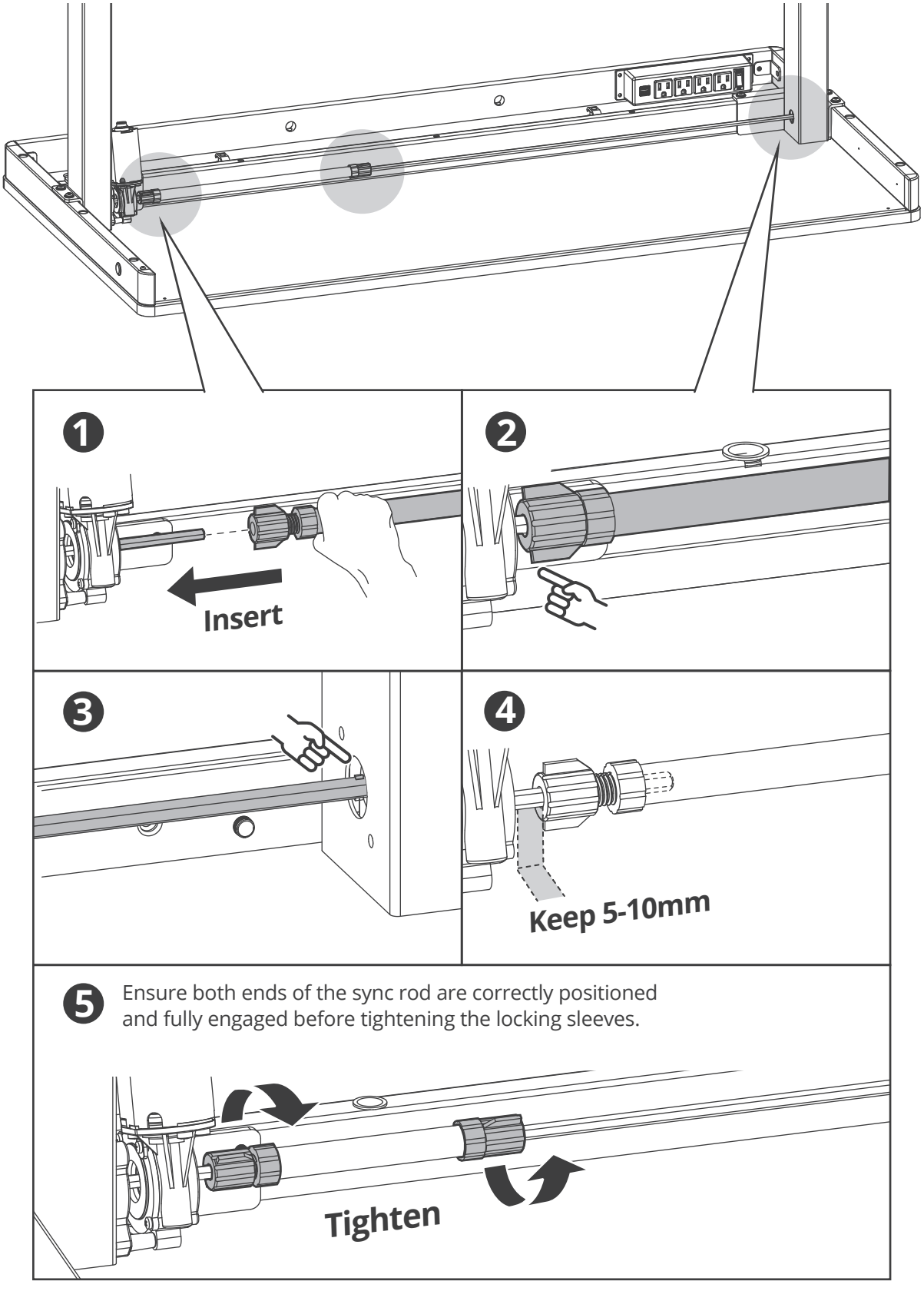
1
Insert
2
3
4
Keep 5-10mm
5
Ensure both ends of the sync rod are correctly positioned and fully engaged before tightening the locking sleeves.
Tighten

7

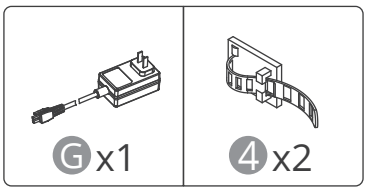

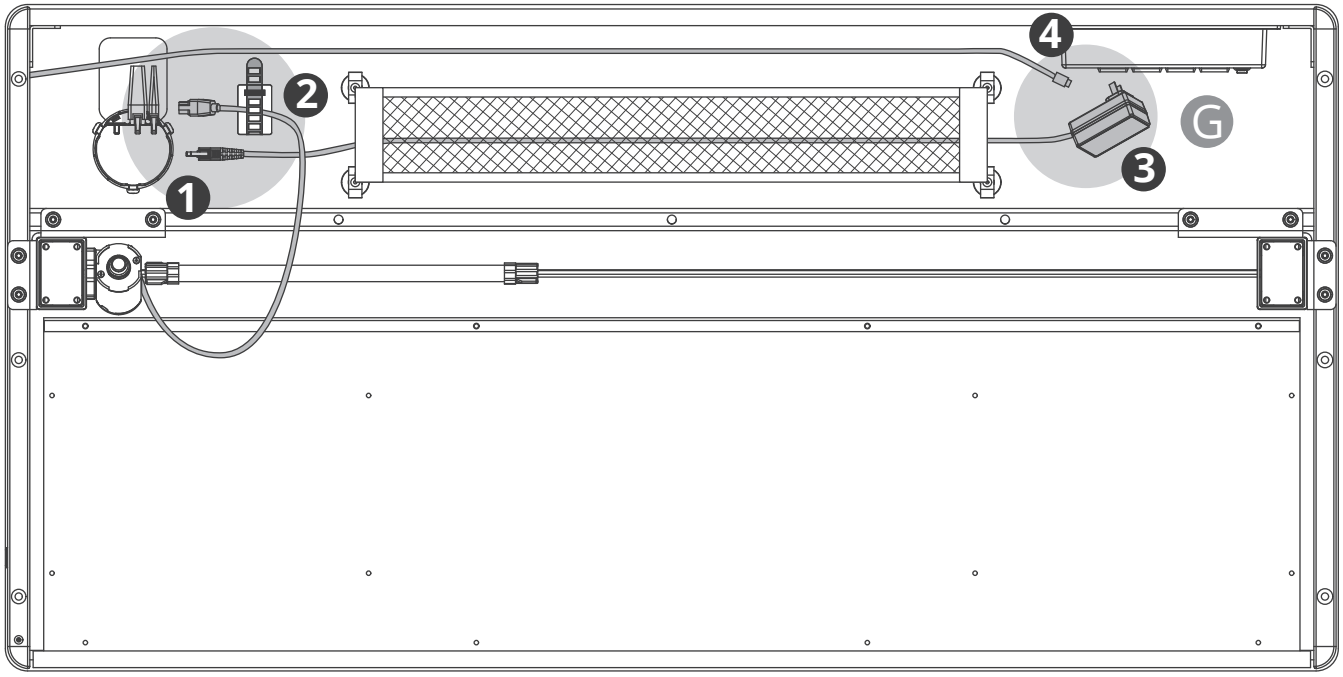

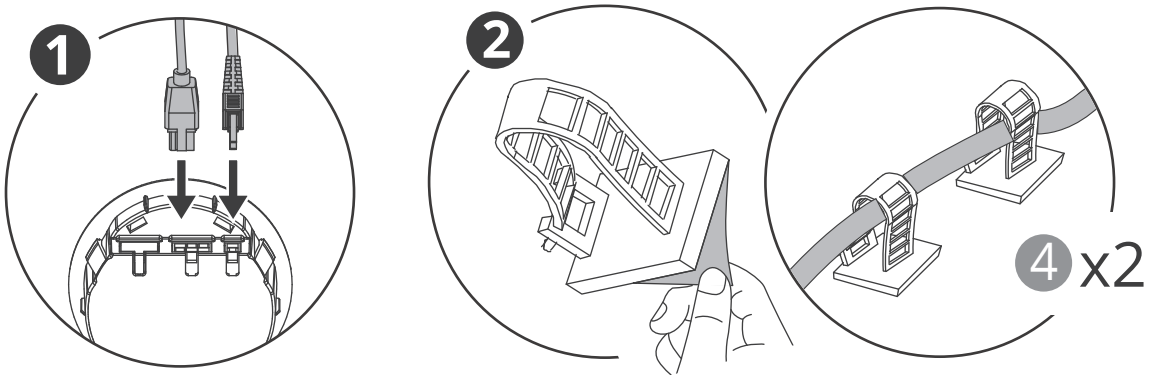

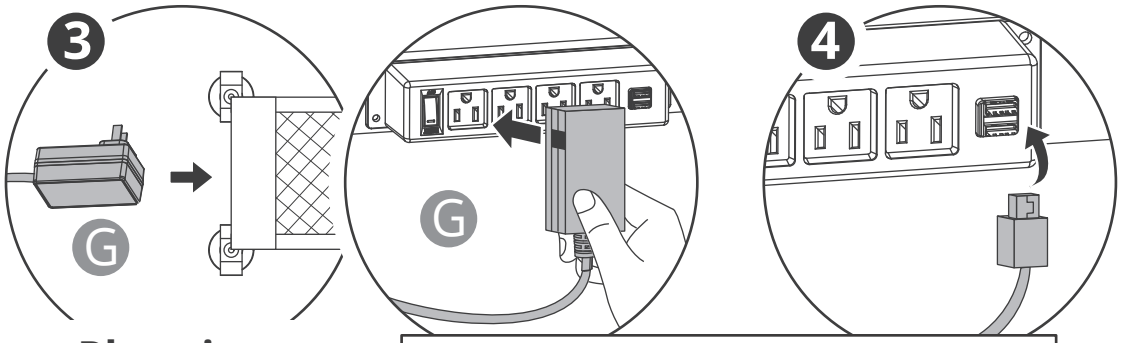

Place into the mesh bag

Note: Sockets feature tight shutters; apply firm pressure when plugging in devices.

8 The recommended torque for the locking frame screws is **15 N·m**; please ensure the screws are tightened for a more stable table.

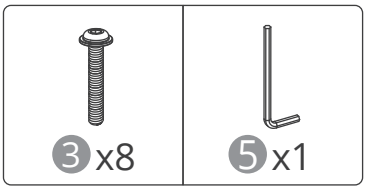

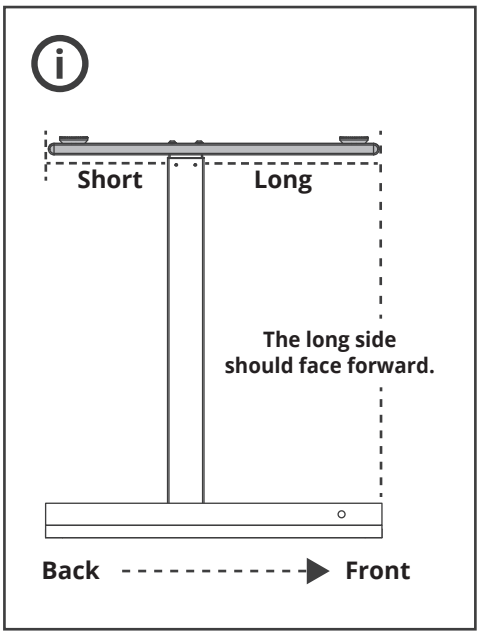

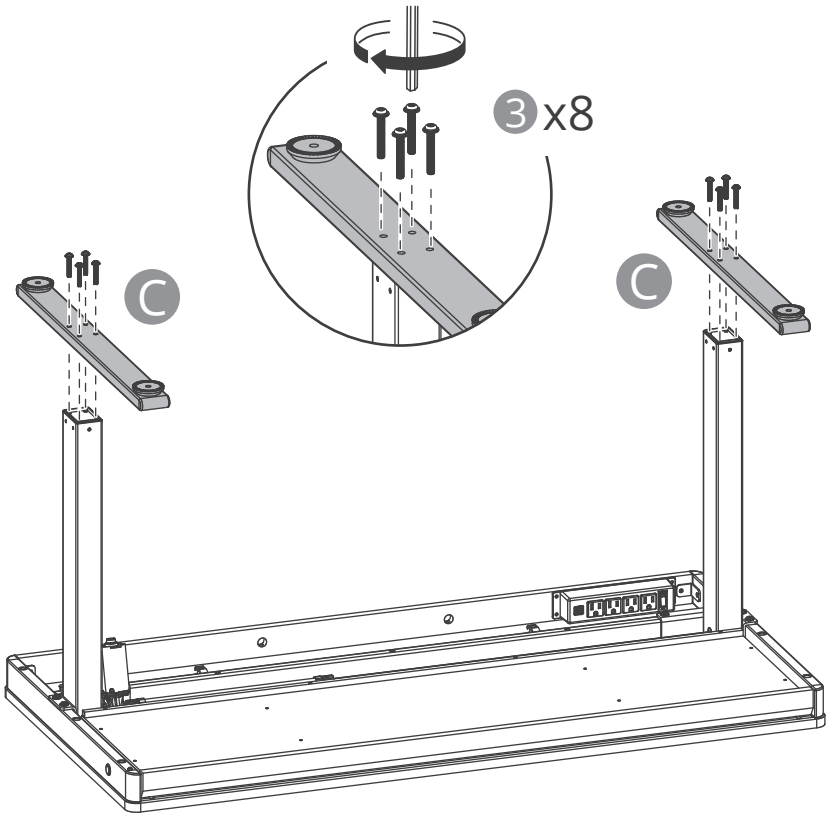

9 **Note:** Do not rest any weight on the keypad during the flip.



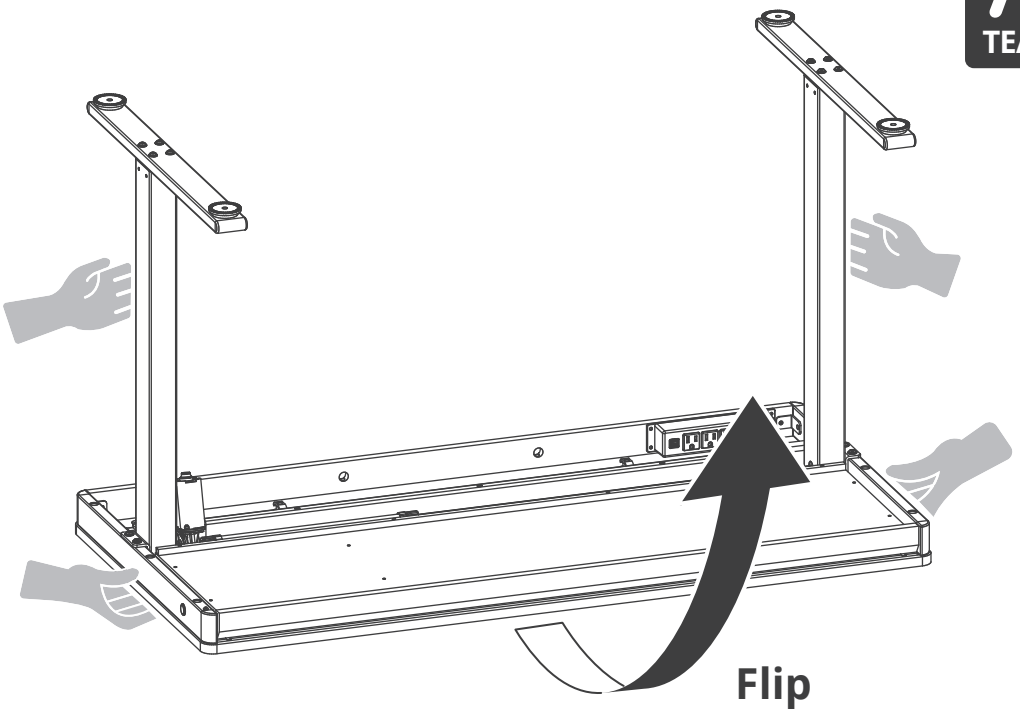

10 Connect the main power cord to the power strip.

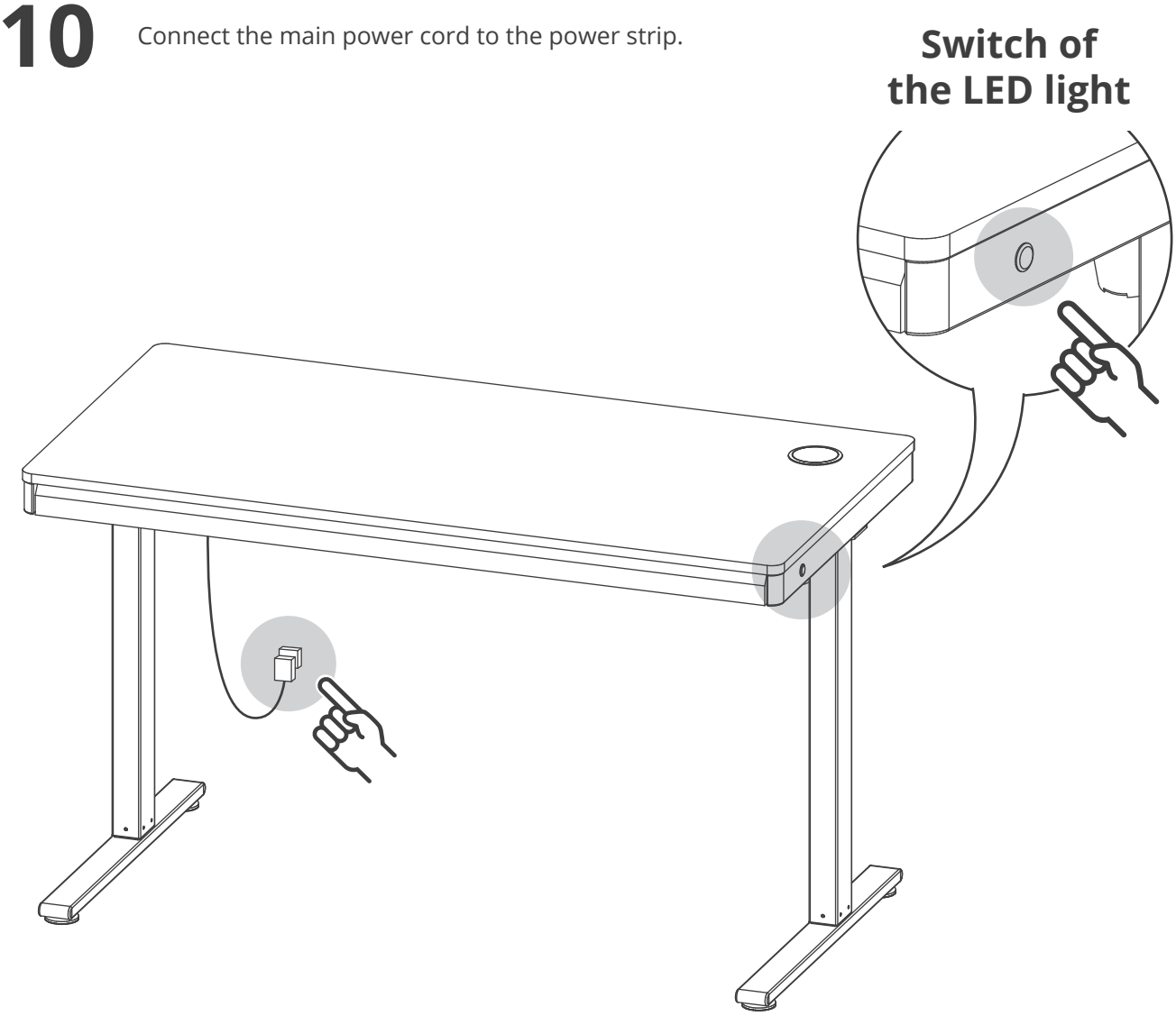

LED light Functions and Operations

1 **Press the switch once:**

Turn on the light.

Press the switch twice:

Turn off the light.

2 **Press once after turning on the light:**

Adjust the light colors in order: White→Warm white→Red→Green→ Blue → Color cycle →Color jump→Full-color breathing→Off.

11

Insert support tube Ⓔ here only if you are installing **a monitor arm**.

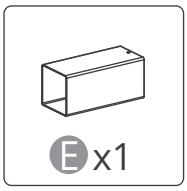

Need *Monitor Arm*

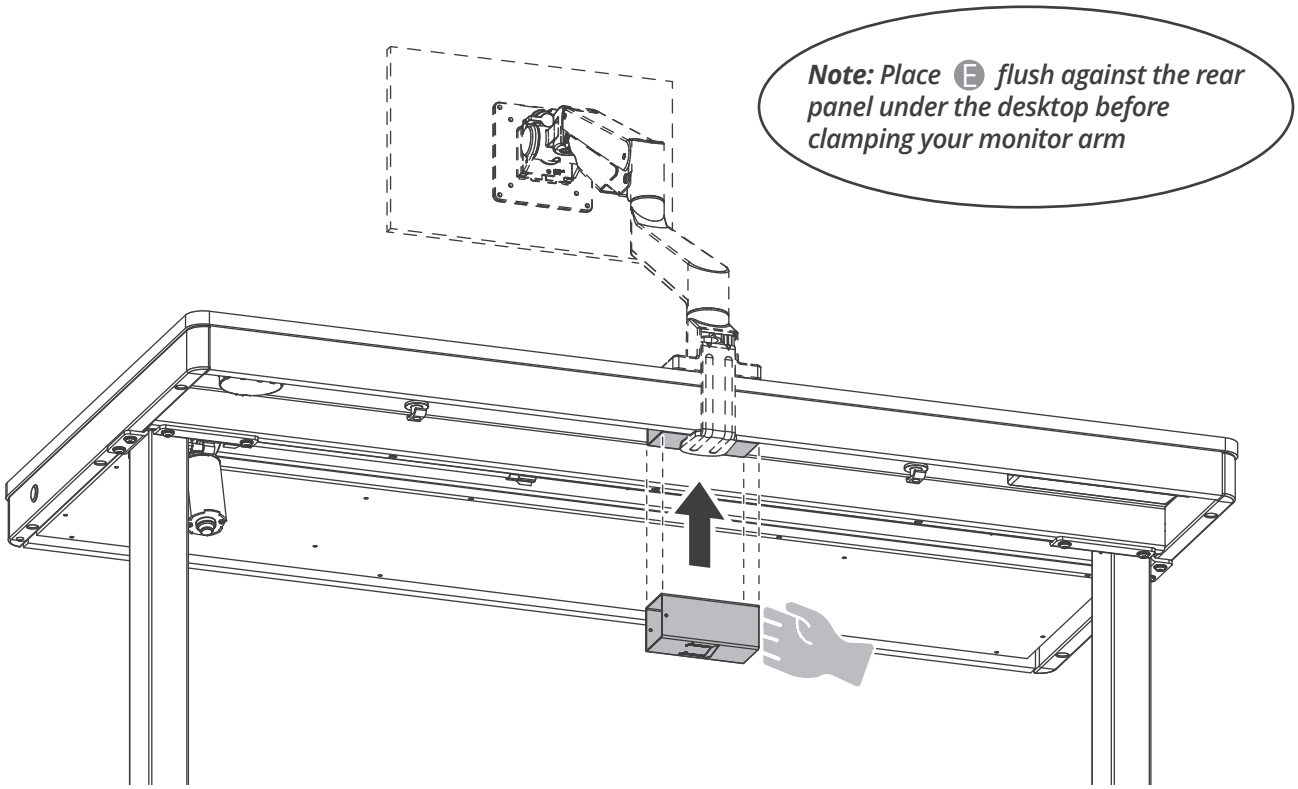

No *Monitor Arm*

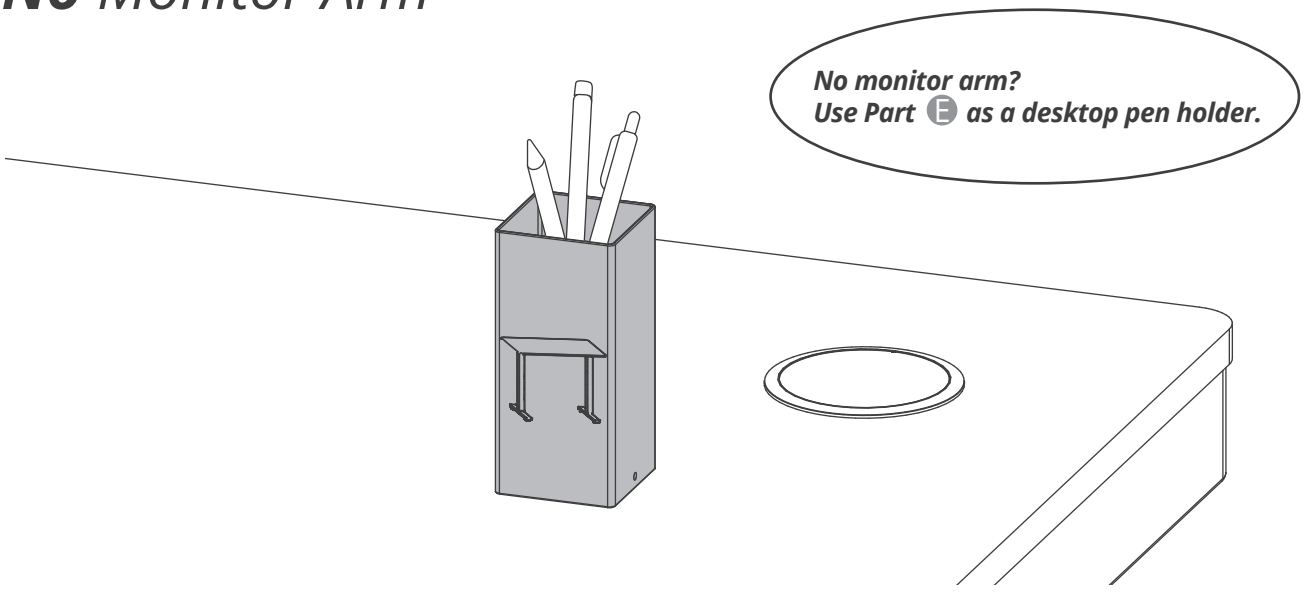

12

Connect the main power cord to the power strip.



You're amazing!
The installation is now complete.
Enjoy your Standing Desk!

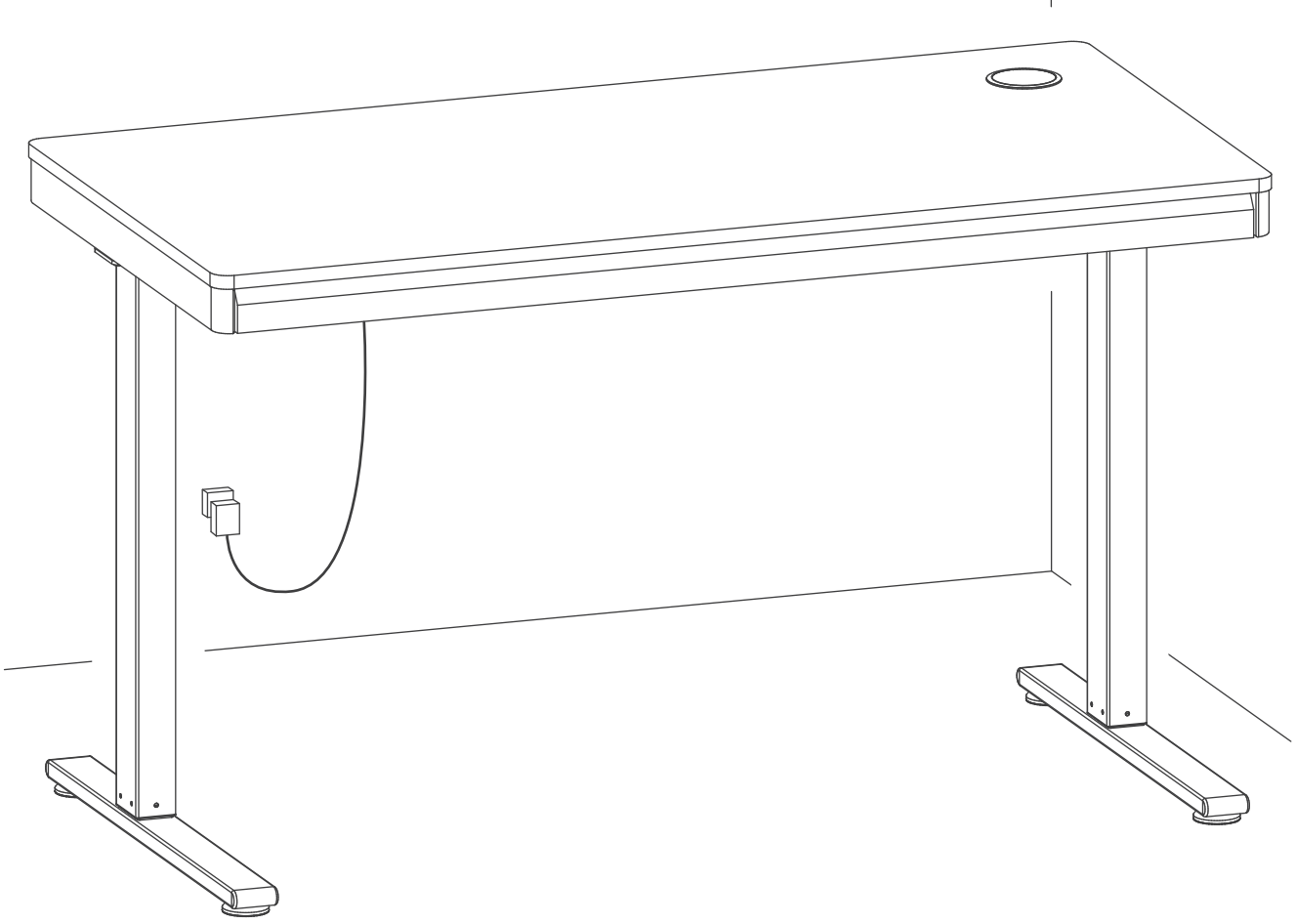

Tips for using the drawer and mesh bag

Tip: Pull **the drawer** from the middle for the smoothest glide.

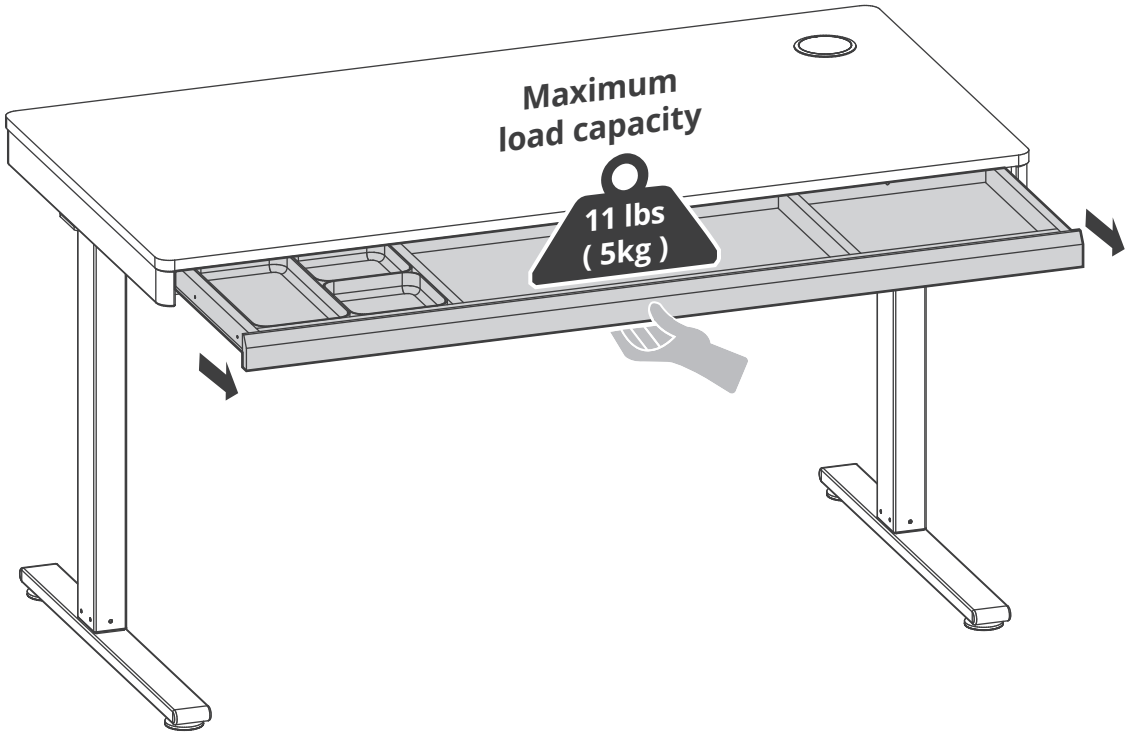

Tip: Bundling the cables and placing them in **the mesh bag** allows for better cable organization.

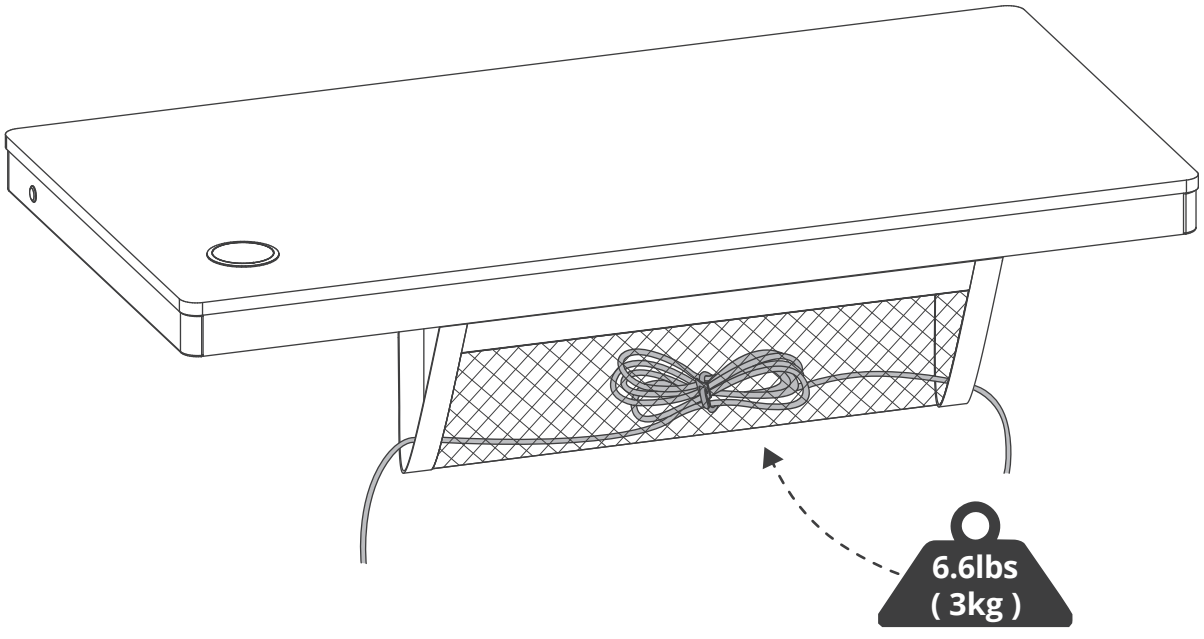

Maximum load capacity

Keypad Functions and Operations

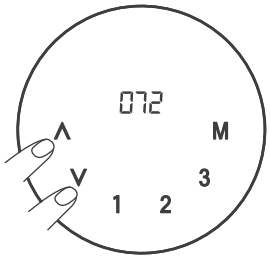

Height Adjustment

To move the desk: Press and hold the ∧ or ∨ button until the desk reaches your desired height. The display will show the current height.

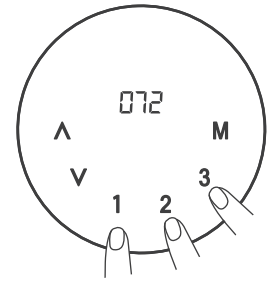

Memory Presets

- Save a height: Adjust the desk to your desired height. Press the M button (the height will flash on the display). Within 6 seconds, press 1 , 2 , or 3 to save the current height to that number.

- Recall a height: Simply press 1 , 2 , or 3 , and the desk will automatically adjust to the saved height.

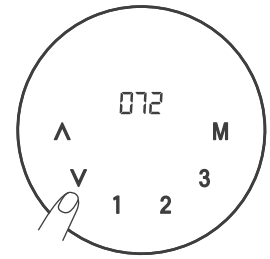

System Reset

A reset may be required if the display shows an error code (e.g., Er1 , E20) or if the desk is unresponsive.

1. Press and hold the ∨ button for at least 3 seconds.
2. Release the button when the display shows rST .
3. The desk will automatically lower to its lowest position and then rise slightly.
4. The reset is complete when the display shows the minimum height.

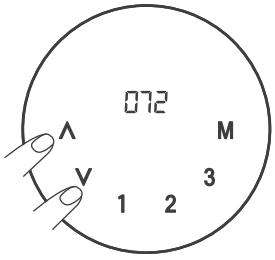

Child Lock

- To Lock: Press and hold ∧ + ∨ simultaneously for 3 seconds. The display will show LoC , and all buttons will be disabled.

- To Unlock: Press and hold ∧ + ∨ simultaneously for 5 seconds until the height is displayed again.

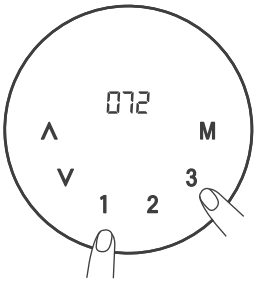

Sit/Stand Reminder

- **Set the timer:** Press and hold 1 + 3 simultaneously for 3 seconds. The screen will flash 0.5H (30 minutes).
- Use ∧ / ∨ to adjust the timer from 0.0H to 3.0H in 30-minute increments.
- Press M to confirm.
- **Note:** When the timer is active, a small dot (.) will appear on the standby screen. The timer resets automatically if the desk height is adjusted. Setting the time to 0.0H displays OFF and disables the reminder.

Advanced Settings

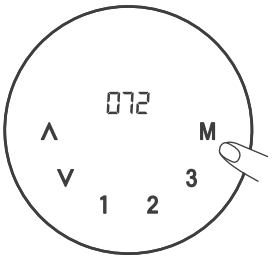

How to navigate the settings menu:

1. Press and hold the M button for 3 seconds until S-- flashes on the screen.
2. Press M again to enter the menu.
3. Use ∧ / ∨ to scroll through options, press M to confirm, or press 1 to go back to the previous menu. (Note: Menu will automatically exit after 20 seconds of inactivity).

Menu Options:

- Un (Unit of Measurement): Choose between SI (Metric/cm) or In (Imperial/inches).
- bEE (Beep/Audio): Turn the system sound On or OFF.
- CF (Anti-Collision Force): Adjust the sensitivity of the bounce-back safety feature. Options: OFF, L (Light), n (Normal), H (Heavy).

SH (Set Height Limits):

- 0 (Original): Adjust the starting height calibration.
- L (Low): Set a minimum height limit (desk will not go below this point).
- H (High): Set a maximum height limit (desk will not go above this point).

Troubleshooting & Error Codes

Handset displays "E02"	**Anti-Collision Triggered** The desk detected an obstacle, vibration, or tilt. It will stop and slightly reverse. **Solutions** 1. Clear any obstacles and ensure the desk is level before operating again. 2. If the problem persists, please take a video of the issue and contact after-sales support at support@yfs.life.
Handset displays "Hot"	**Overheating** The motors have run continuously for too long. **Solutions** 1. Wait at least 18 minutes before using the desk again. 2. If the problem persists, please take a video of the issue and contact after-sales support at support@yfs.life.
Handset displays "E10"	**Motor Error** A motor connection issue has been detected. **Solutions** 1. Unplug the desk from power, check all motor cable connections to ensure they are secure. 2. Plug it back in, and perform a System Reset (see P16). 3. If the problem persists, please take a video of the issue and contact after-sales support at support@yfs.life.
Handset displays "E20"	**Overload Protection** The weight on the desktop exceeds the maximum load capacity. **Solutions** 1. If raising the desk, remove weight and try again. 2. If lowering, unplug the power, remove weight, and plug it back in. 3. If the problem persists, please take a video of the issue and contact after-sales support at support@yfs.life.

If issue not resolved, please record a video of the problem and contact support@yfs.life

Handset displays "E31"	**Undervoltage Protection** The input voltage from the power source is too low. **Solutions** 1. Unplug the desk, ensure the power cord and control box connections are secure, and plug it back in. 2. If the problem persists, please take a video of the issue and contact after-sales support at support@yfs.life.
Handset displays "E32"	**Overvoltage Protection** The input voltage from the power source is too high. **Solutions** 1. Unplug the desk, ensure the power cord and control box connections are secure, and plug it back in. 2. If the problem persists, please take a video of the issue and contact after-sales support at support@yfs.life.

Looking for help?

We’re Here For You!

support @yfs.life

For assembly assistance,You can send us emails.

Please keep this manual for after-sales use.