USER MANUAL

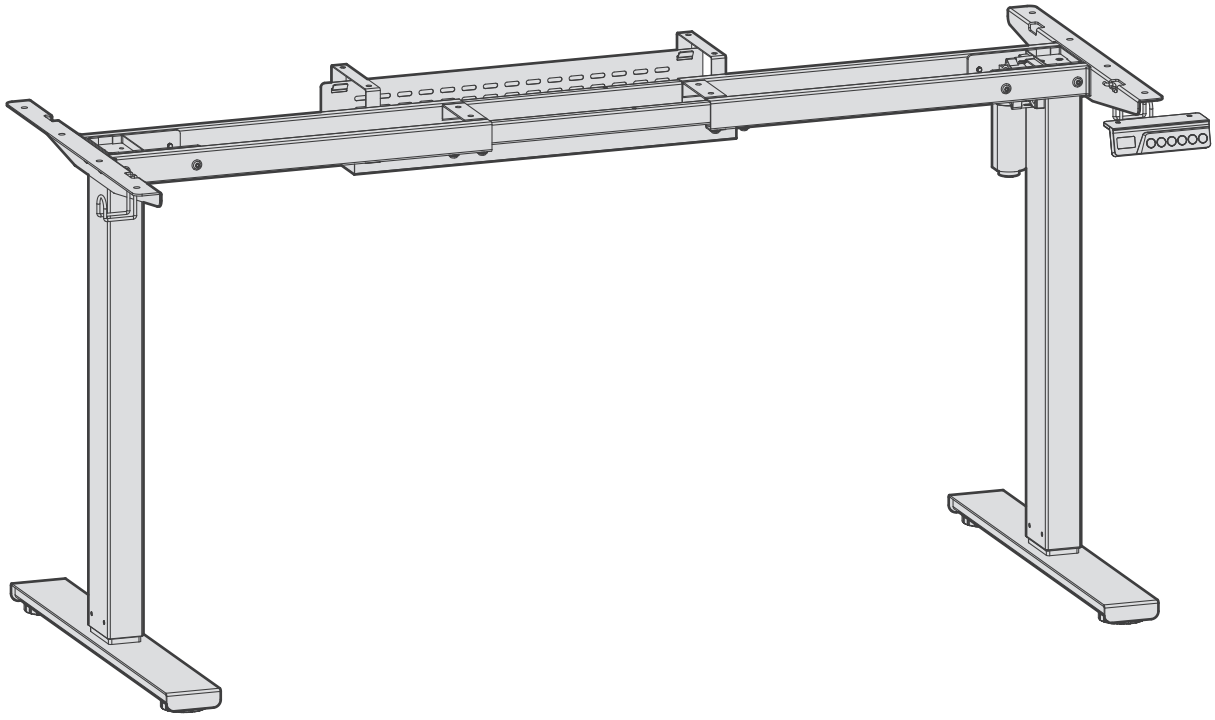

Scan QR code for installation video

support@yfs.life

yfs.life/aab

Caution

- Keep children and animals away from the desk during use. Ensure the desktop is not touching any walls.
- Remove obstacles taller than 20 "/51 cm from underneath the desk.
- Operate only in a working environment temperature of 32 °F -104 °F / 0 °C - 40 °C.
- Keep product away from corrosive gases, liquids and dusty objects.
- Keep hands, feet and other body parts in a safe position during operation. Anti-collision is not automatically enabled when reset.
- The company does not bear any warranty or liability for damage and human injury caused by any abnormal or un-intended operation of the equipment.
- It is necessary to perform a manual reset after the initial installation or power cycling the equipment.

Customer Service

30-Day Easy Returns

If your purchase isn't the right fit, you can return it within the 30-day return window.

Reliable Warranty

2-Year Warranty for Motor & Electronics
5-Year Warranty for Desk Frame & Structural Components

24x7h Support

Simple email us at **support@yfs.life**.
Our support team typically responds within **24x7 hours**.

Product Overview

Height Range	28.3"–46.5" (720–1180 mm)
Weight Capacity	Up to 264 lb (120 kg)
Adjustment Speed	Rated at 0.63 in/sec (16mm/sec)
Operating Noise	Up to 45 dB
Frame Design	Single Motor • Dual Crossbeam • Enhanced Stability
Memory Presets	3 Programmable Heights
Safety Features	Anti-Collision Protection • Child Lock
USB-C Fast Charging	Built-in 22W USB-C Port
Frame Material	Powder-Coated Steel

Built for Everyday Stability

The reinforced **dual-crossbeam frame** is engineered to provide outstanding stability throughout the entire height range, helping keep your workspace steady while you work.

Safety & Compliance

Including **FCC SDoC**, **TSCA Title VI**, and **California Proposition 65**, where applicable.

Pre-Installation Preparation

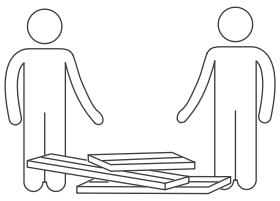	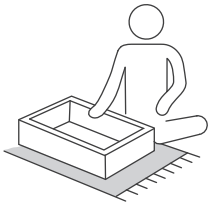	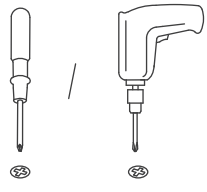	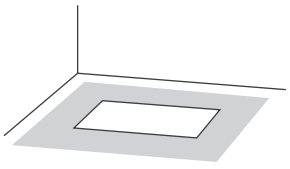
Complete through collaboration.	Assemble on a clean, flat, and protective surface.	Phillips screwdriver or drill required (not provided).	Allow an assembly area at least twice the desktop size.

PARTS LIST

For faster and easier installation, please assemble the desk frame alongside the desktop.

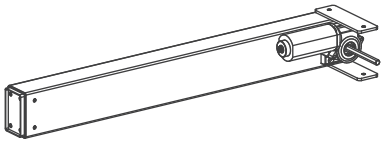

A x1

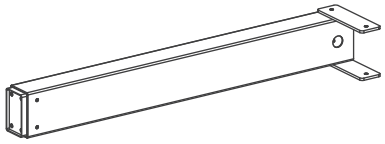

B x1

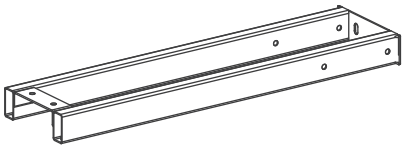

C x2

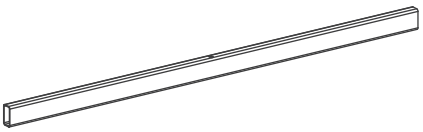

D x2

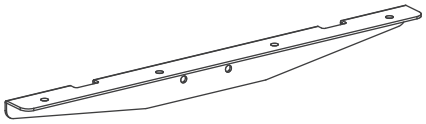

E x2

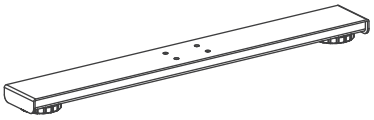

F x2

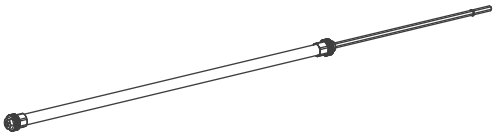

G x1

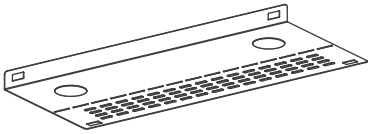

H x1

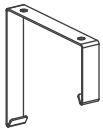

I x2

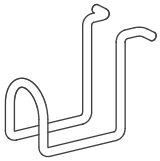

J x2

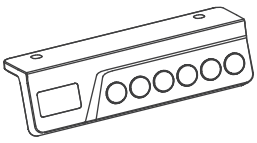

K x1

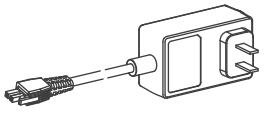

L x1

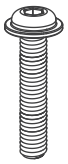

1 x(8+1)
M6X28



2 x(28+1)
M6X12



3 x(18+1)
ST5x14

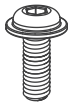

4 x(8+1)
M6X16

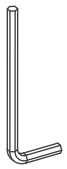

5 x1
5mm



6 x1
19mm

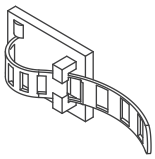

7 x2



8 x4

EXPLODED VIEW DIAGRAM

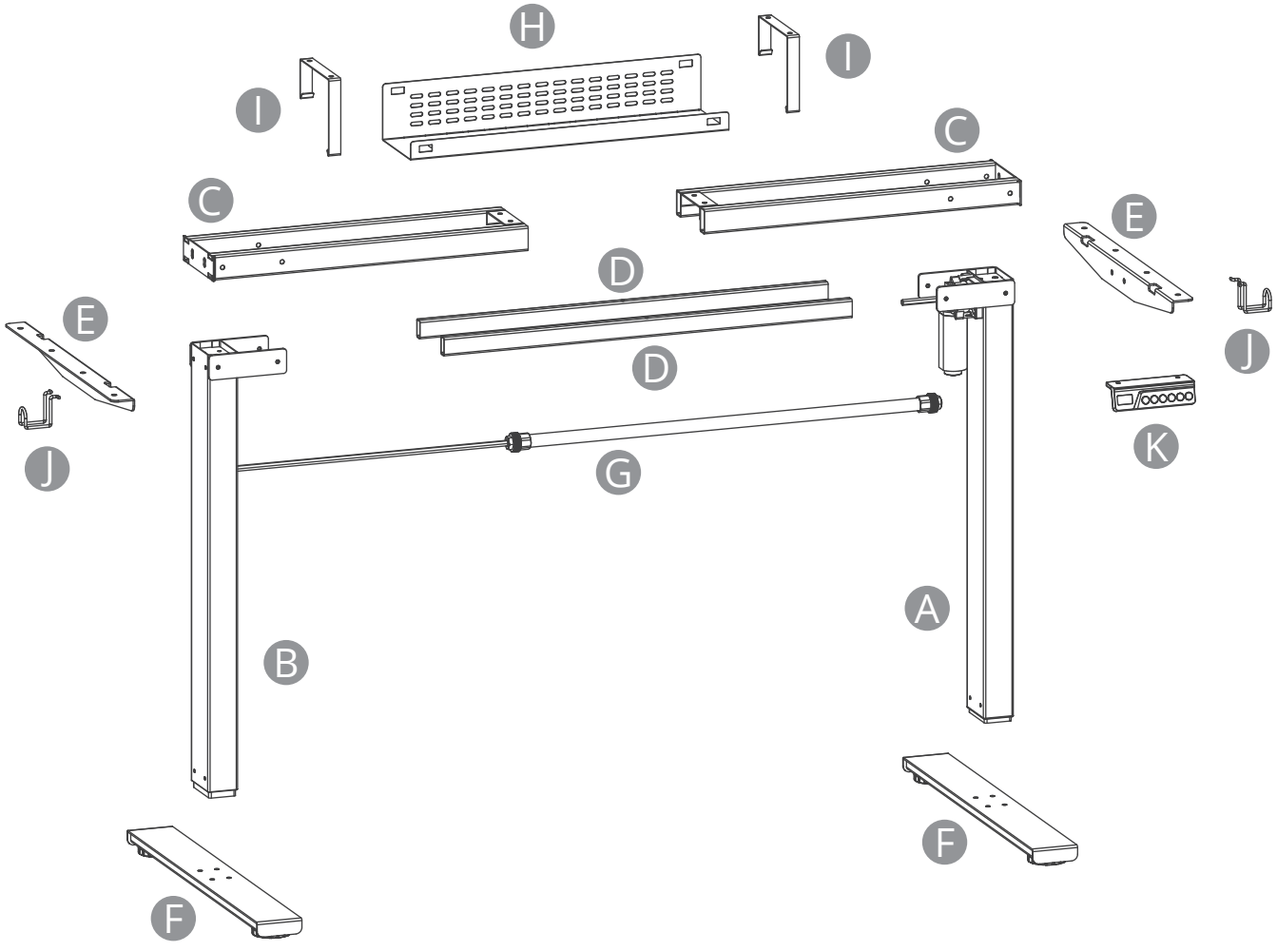

1

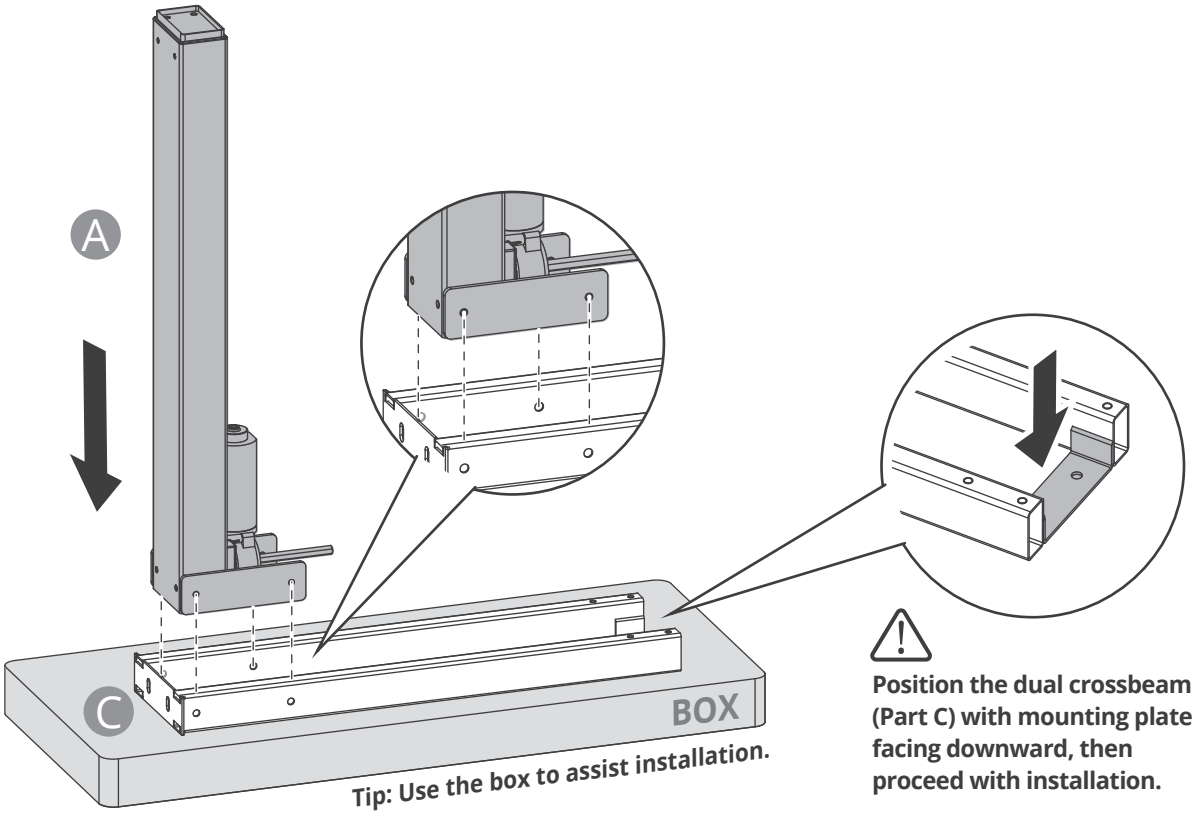

Tip: Use the box to assist installation.

Position the dual crossbeam (Part C) with mounting plate facing downward, then proceed with installation.

2

The recommended torque for the locking frame screws is **15 N·m**; please ensure the screws are tightened for a more stable table.

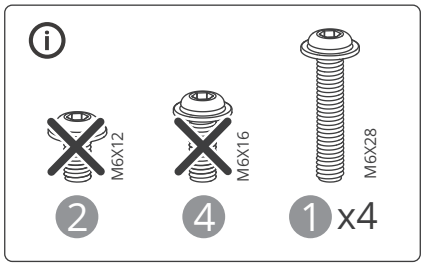

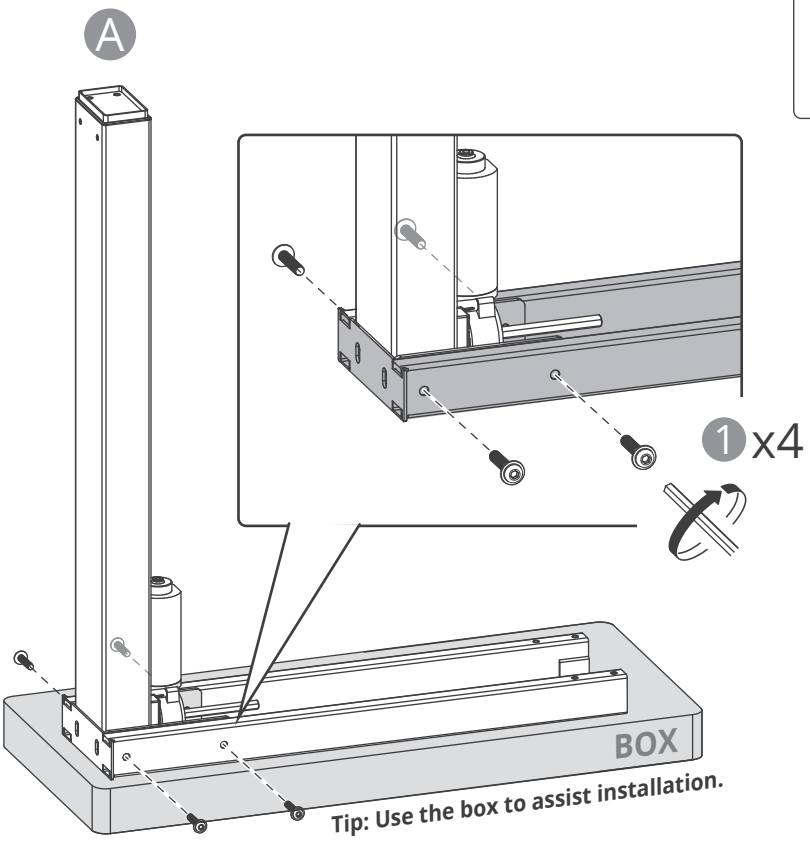

Tip: Use the box to assist installation.

3

The recommended torque for the locking frame screws is **15 N·m**; please ensure the screws are tightened for a more stable table.

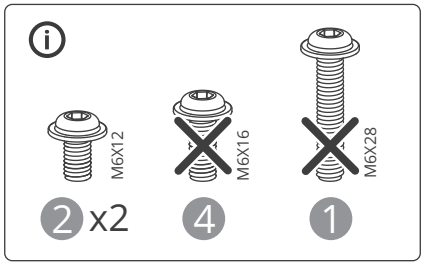

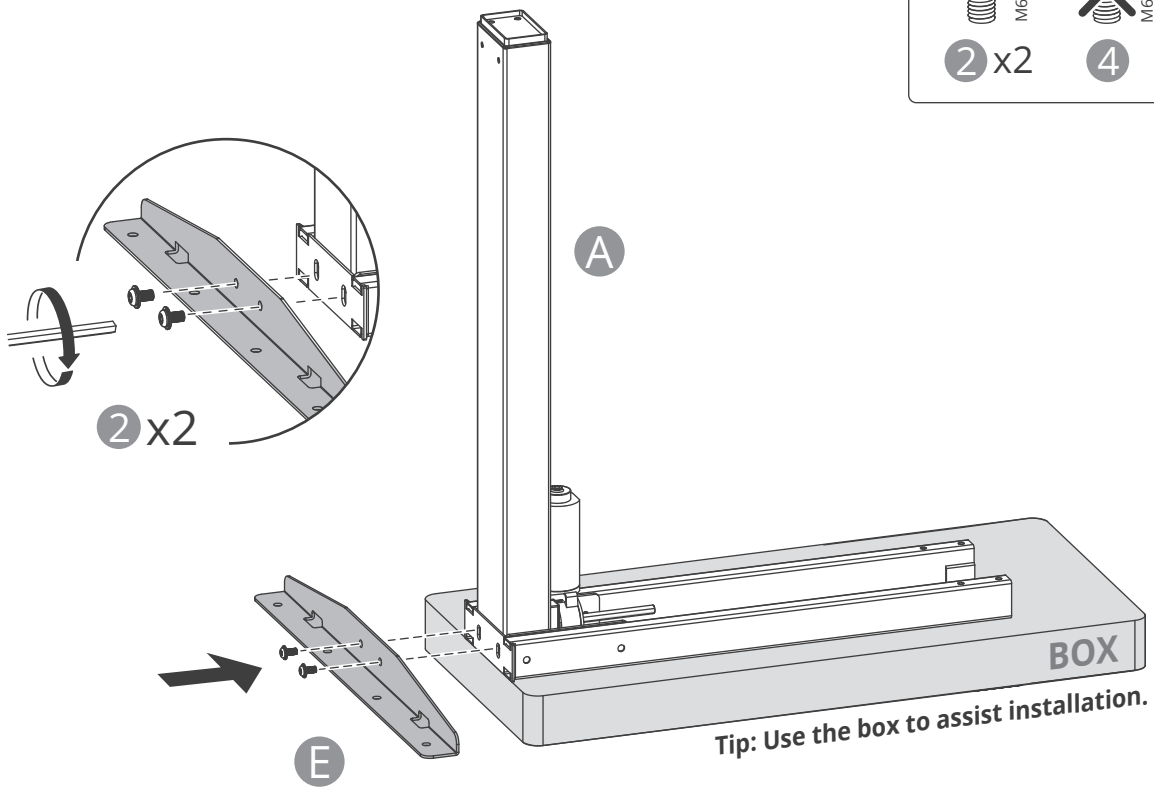

Tip: Use the box to assist installation.

4

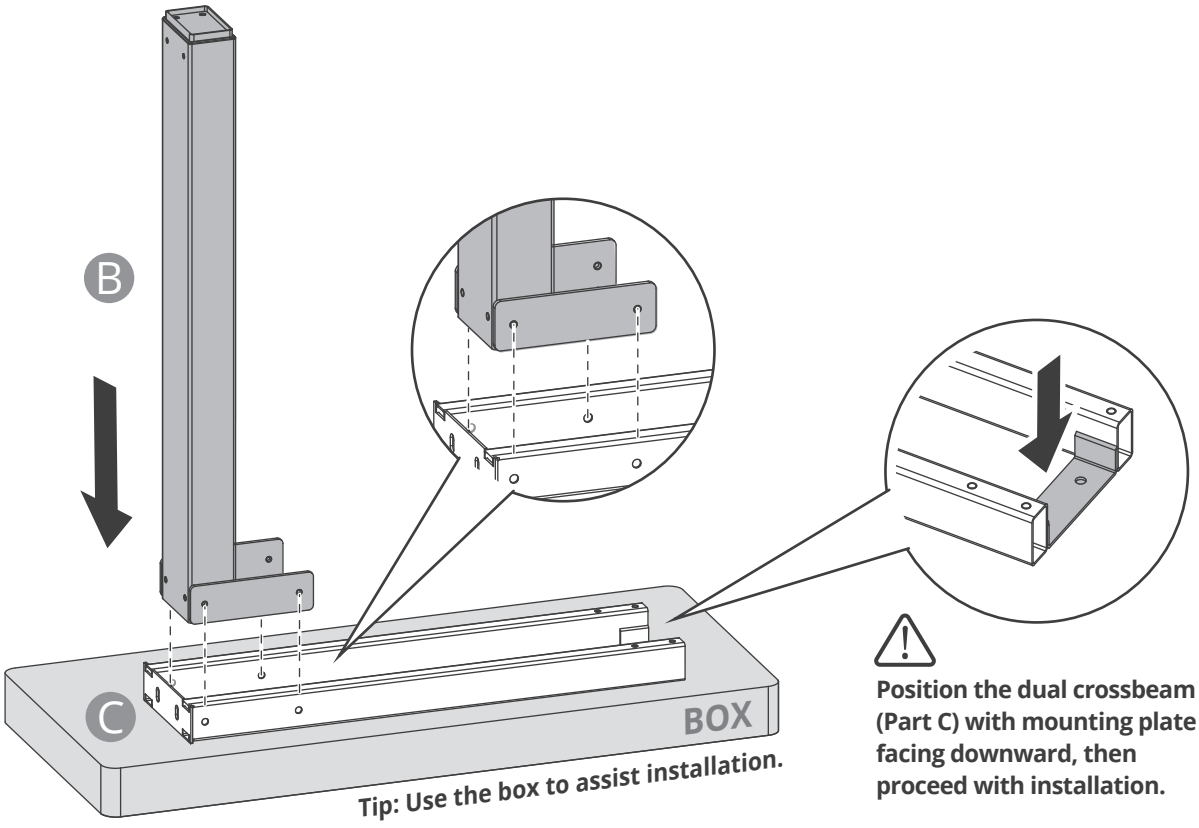

Tip: Use the box to assist installation.

Position the dual crossbeam (Part C) with mounting plate facing downward, then proceed with installation.

5 The recommended torque for the locking frame screws is **15 N·m**; please ensure the screws are tightened for a more stable table.

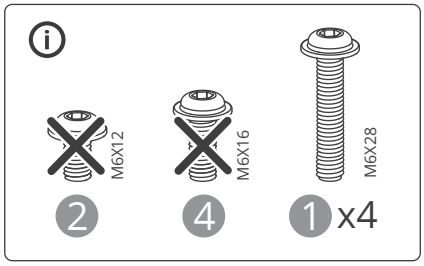

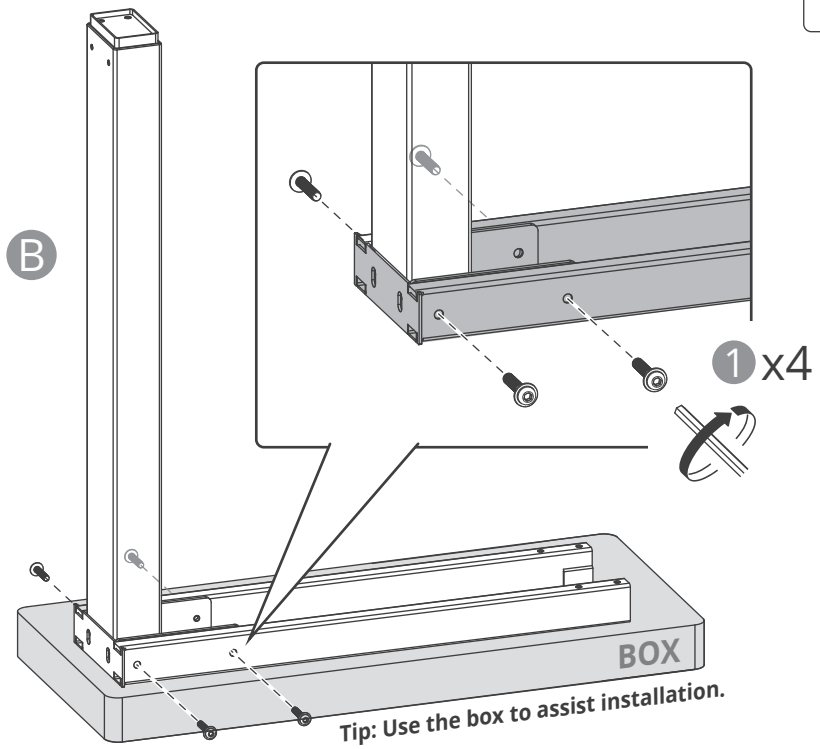

6 The recommended torque for the locking frame screws is **15 N·m**; please ensure the screws are tightened for a more stable table.

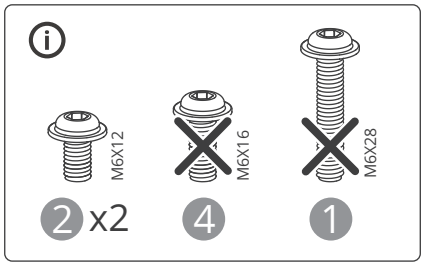

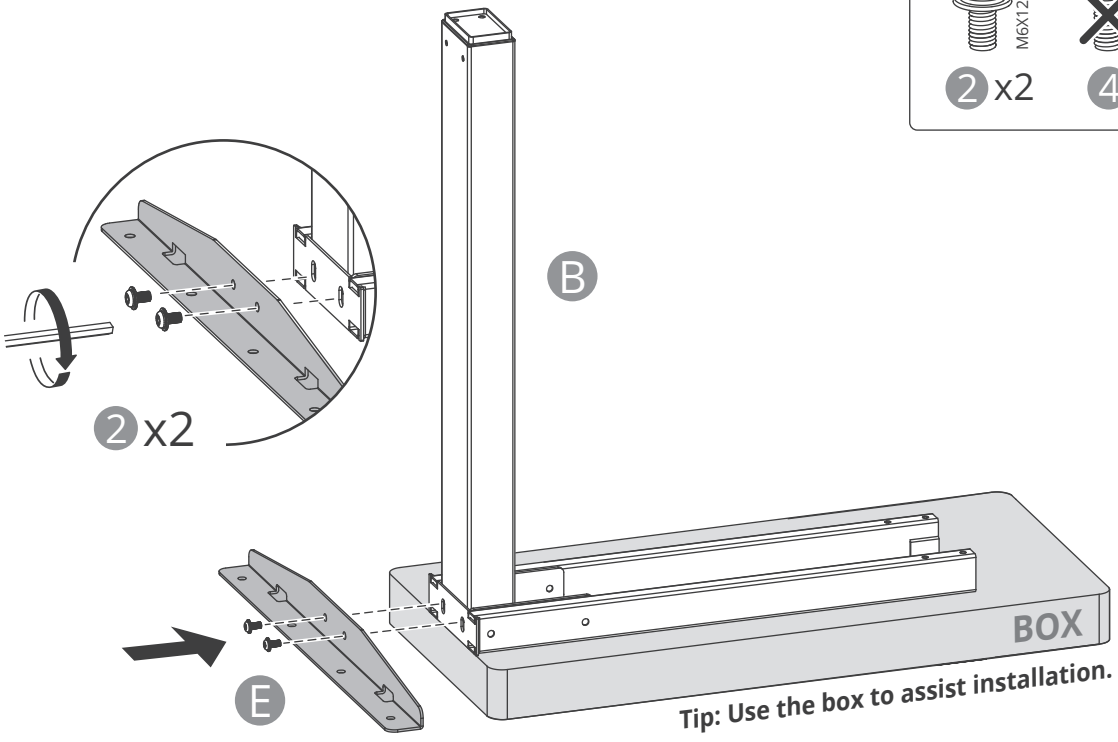

Please note: the desktop below is for assembly reference only.
The desktop is either purchased separately or shipped in a different package.

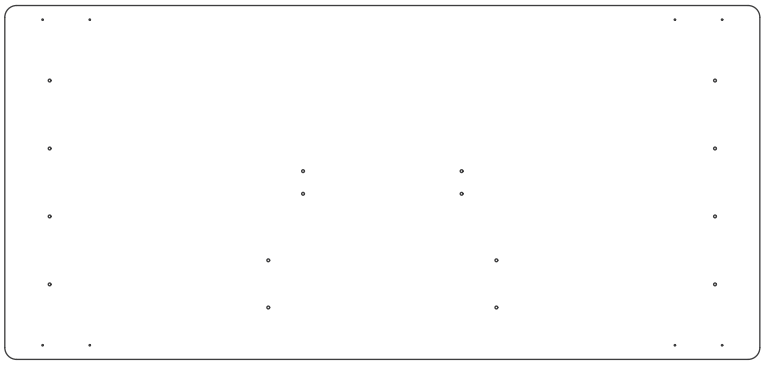

Prepared Desktop

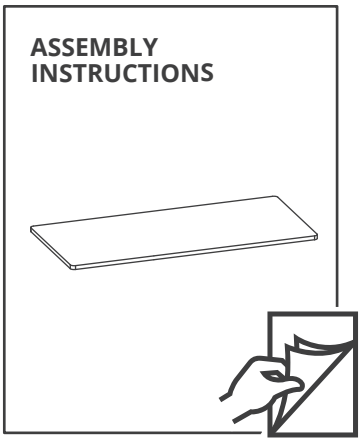

7

Caution: Ensure all pre-drilled holes are aligned before fully tightening the screws. Drive the screws straight down (perpendicular to the surface) to secure the desktop. Recommended torque: **6-10 N.m** (Do not overtighten).

Note: Desktops with pilot holes: Use ❸ (ST5x14mm) screws.
Desktops with embedded nuts: Use ❷ (M6X12 mm) screws.

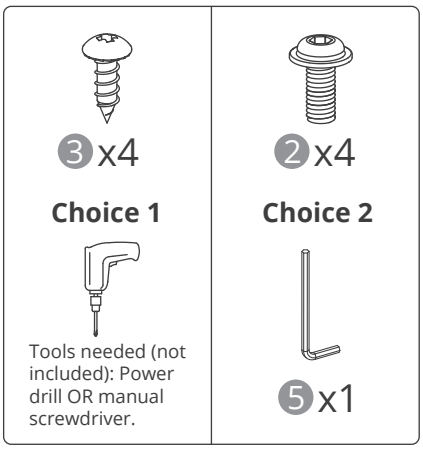

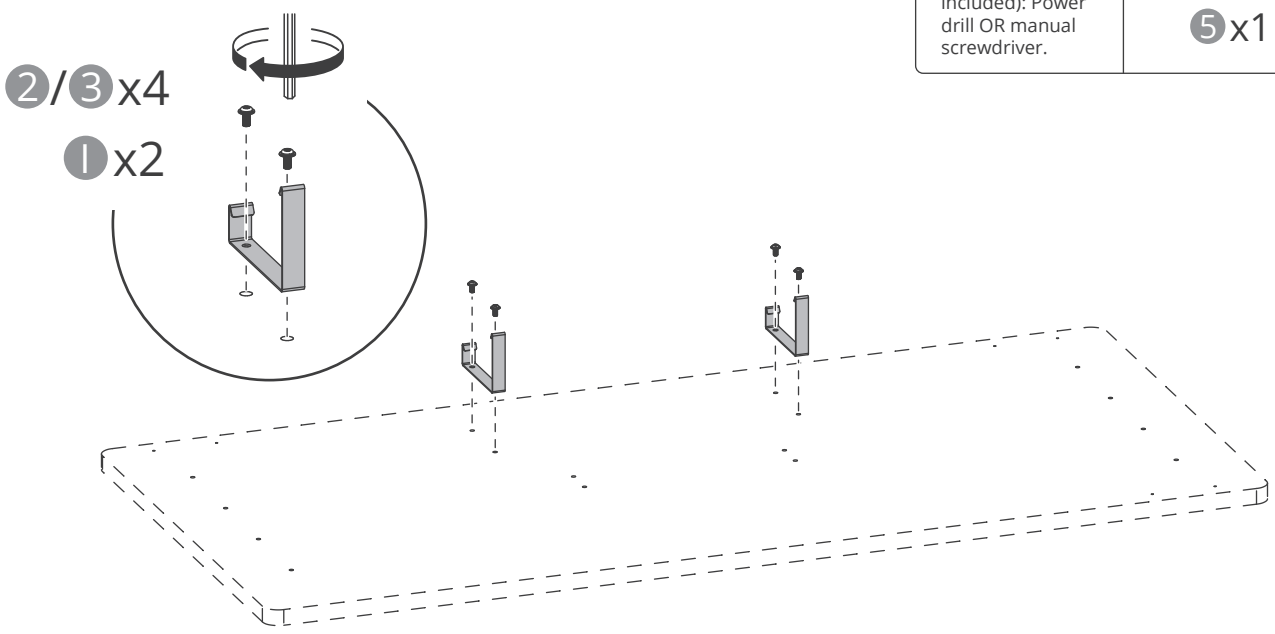

8 The recommended screw torque for locking the desktop is **5-8 N·m**.

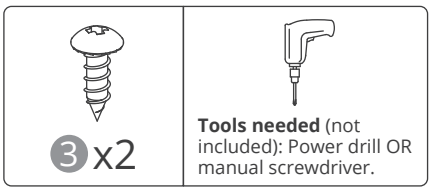

Note: When the desk is upside down, left and right are reversed.
Please refer to the **flipped diagram** and your **lifestyle habits** to choose the installation location.

Left Orientation

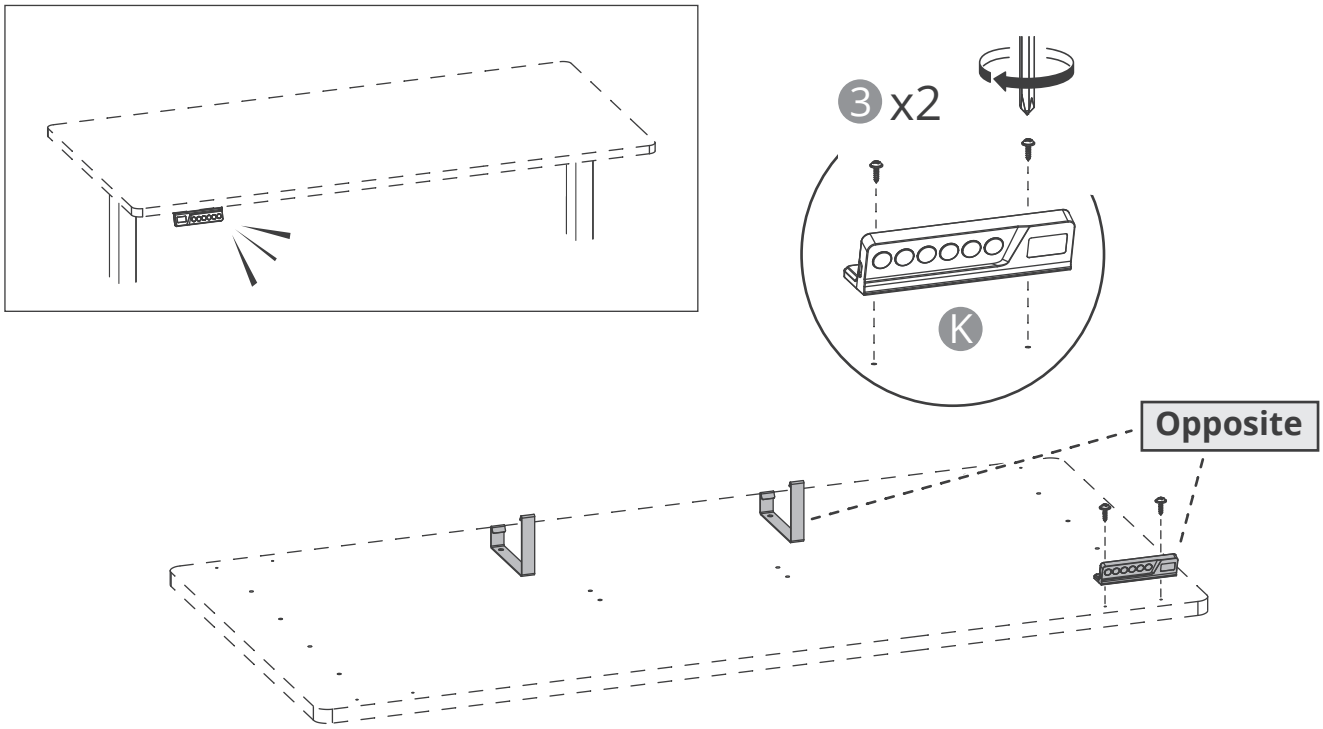

Right Orientation

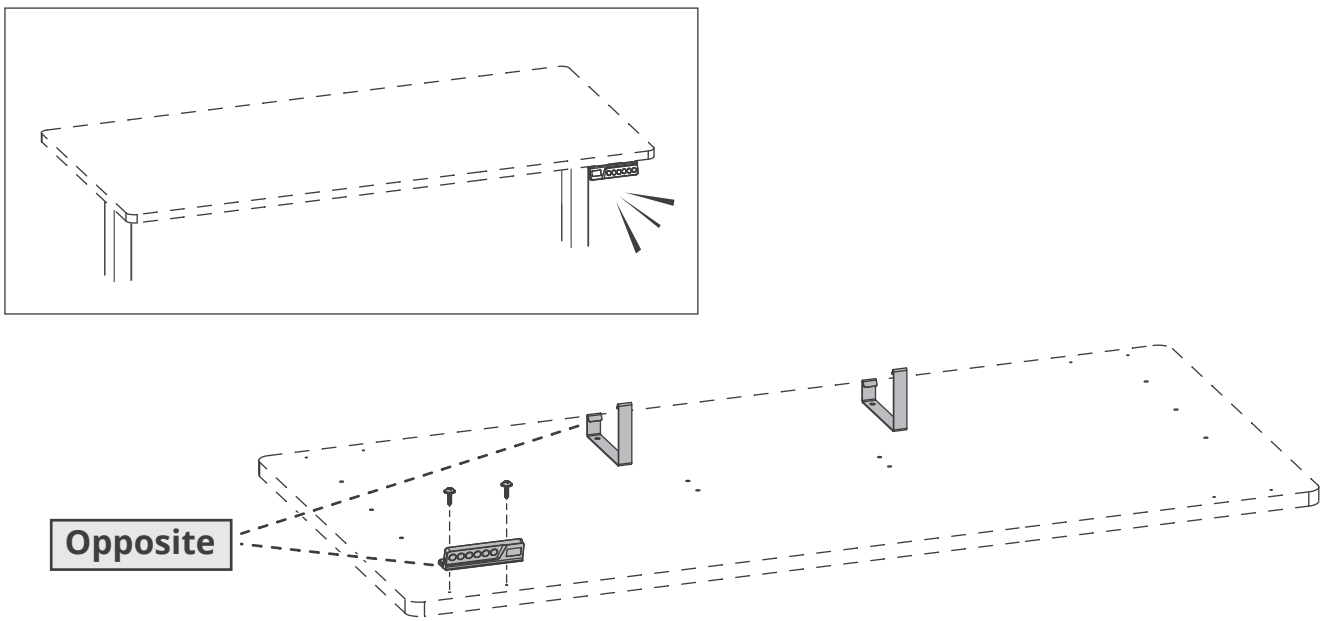

9 The recommended screw torque for locking the desktop is **5-8 N·m**.

 3x6 **Choice 1**  Tools needed (not included): Power drill OR manual screwdriver.	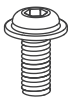 2x6 **Choice 2**  5x1

Note: Before assembly, choose the motor/handset side based on your desk's final location and the nearest power outlet.

Left Orientation

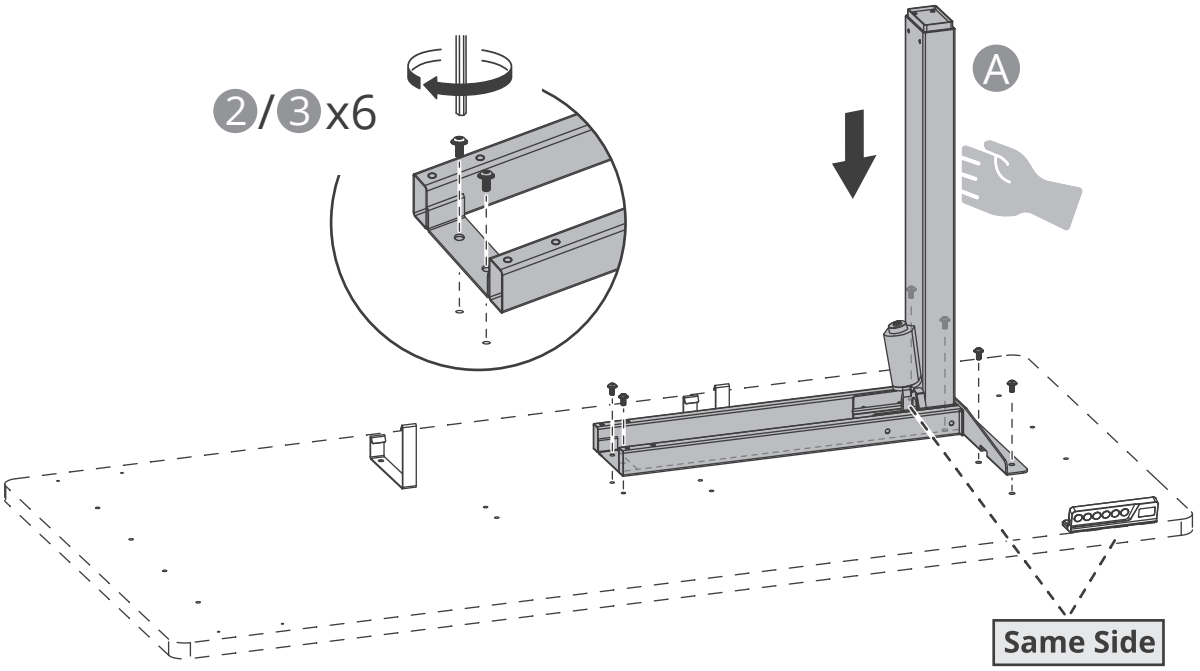

Right Orientation

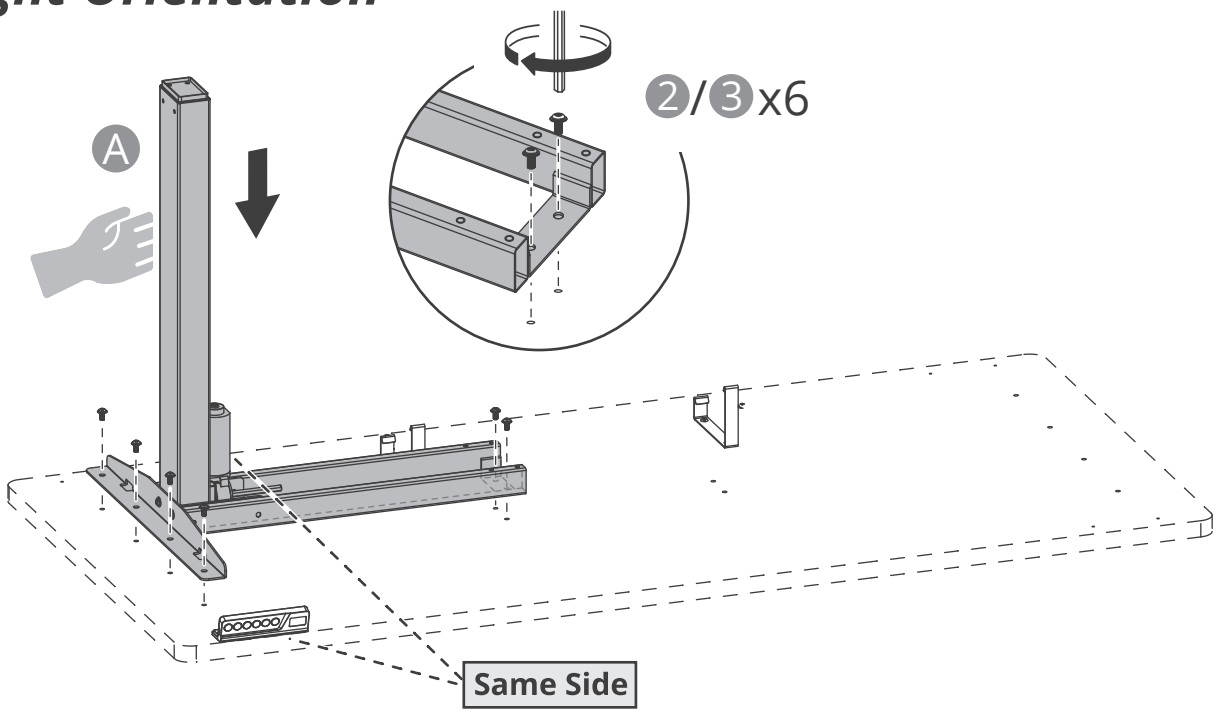

Note: The following illustrations show the **Right-side** handset configuration. If installing the handset on the left side, perform the steps as a **mirror image**.

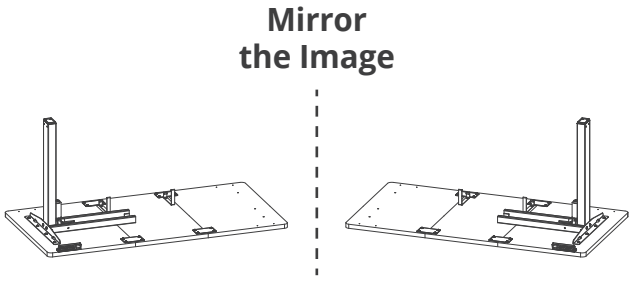

10

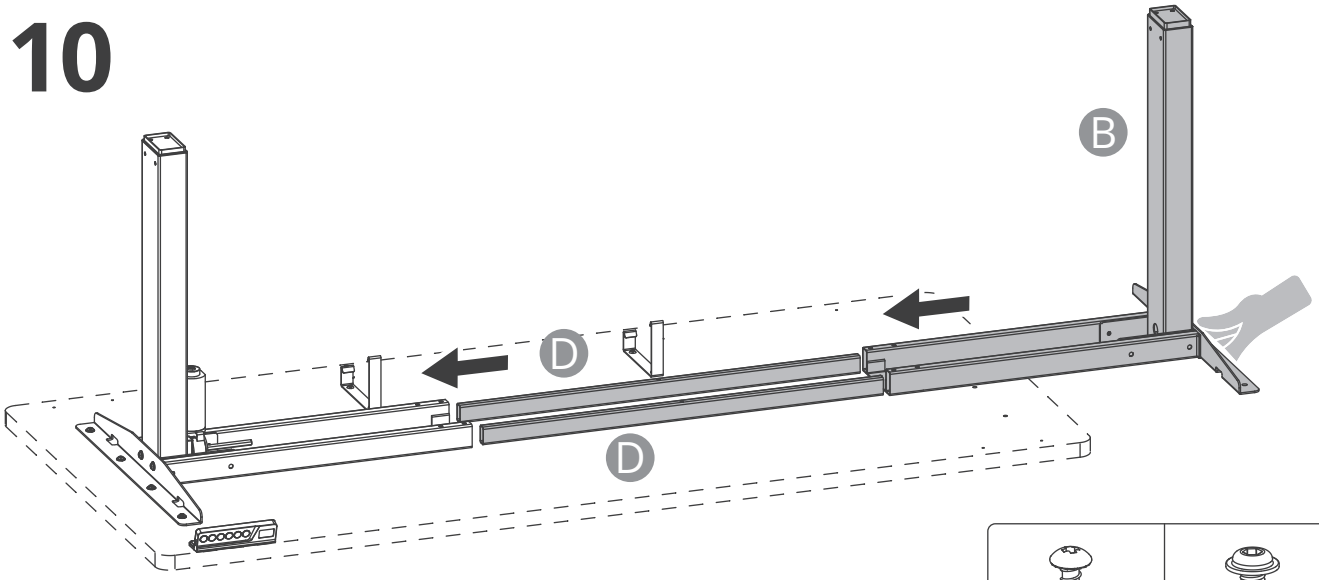

11

Recommended torque: **6-10 N.m** (Do not overtighten).

Note: Desktops with pilot holes: Use 3 (ST5x14mm) screws.
Desktops with embedded nuts: Use 2 (M6X12 mm) screws.

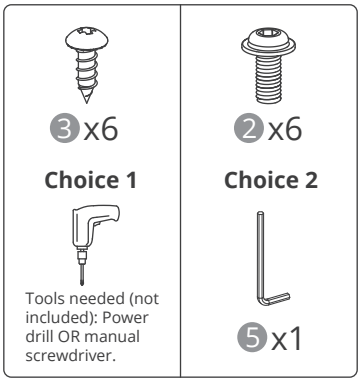

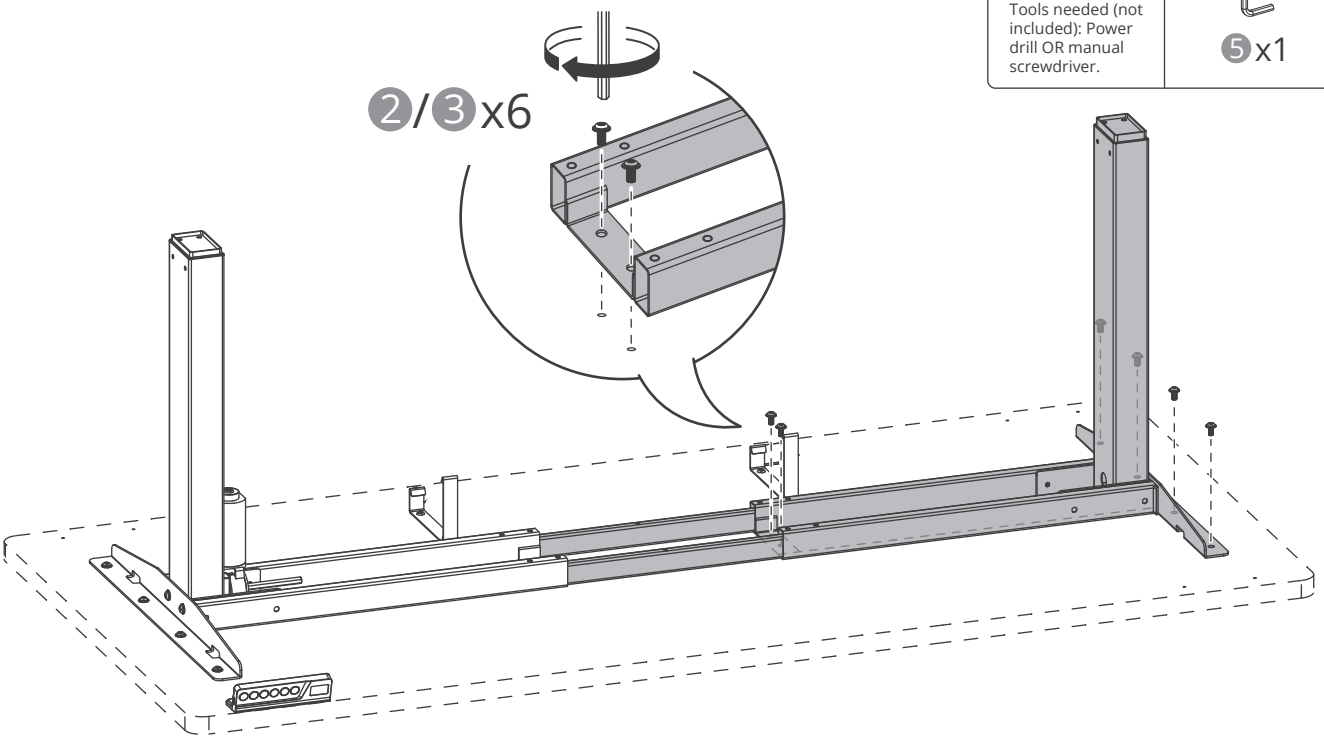

12

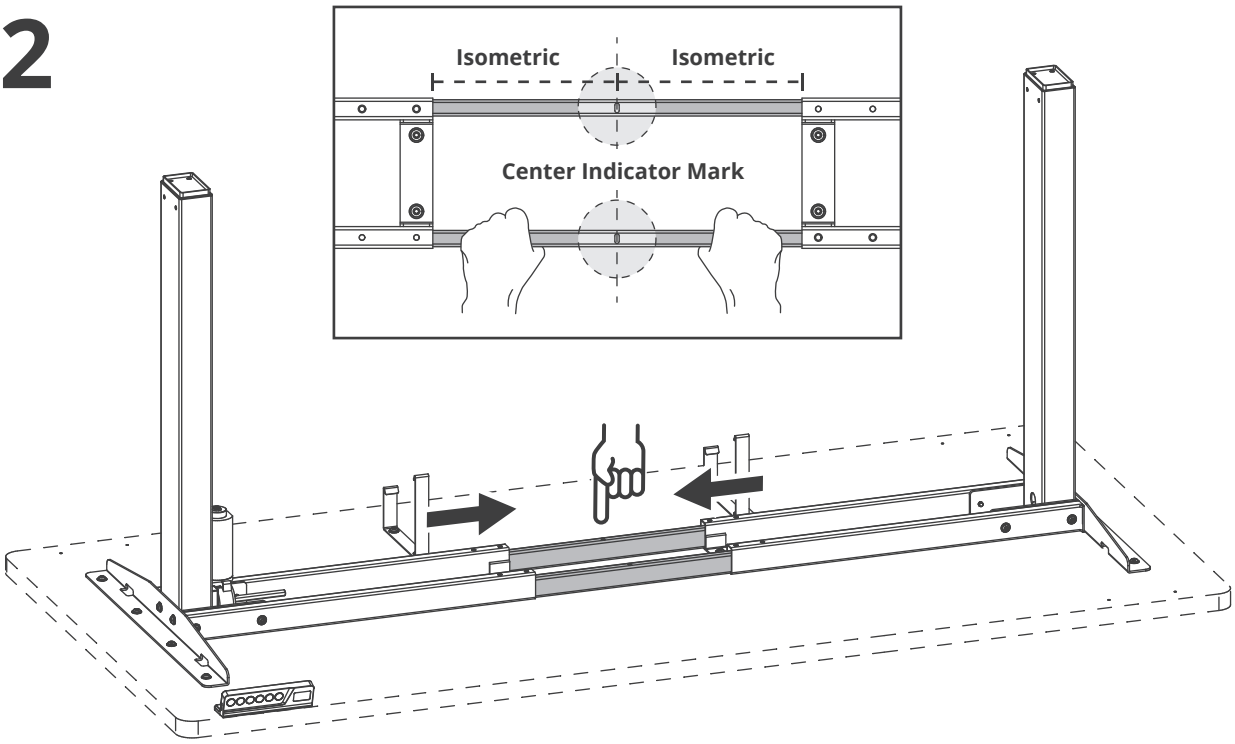

13

The recommended torque for the locking frame screws is **15 N·m**; please ensure the screws are tightened for a more stable table.

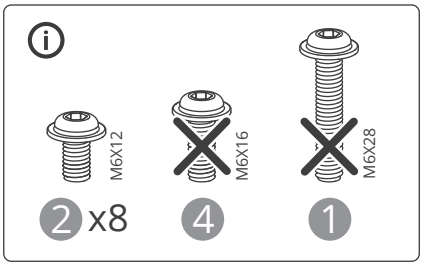

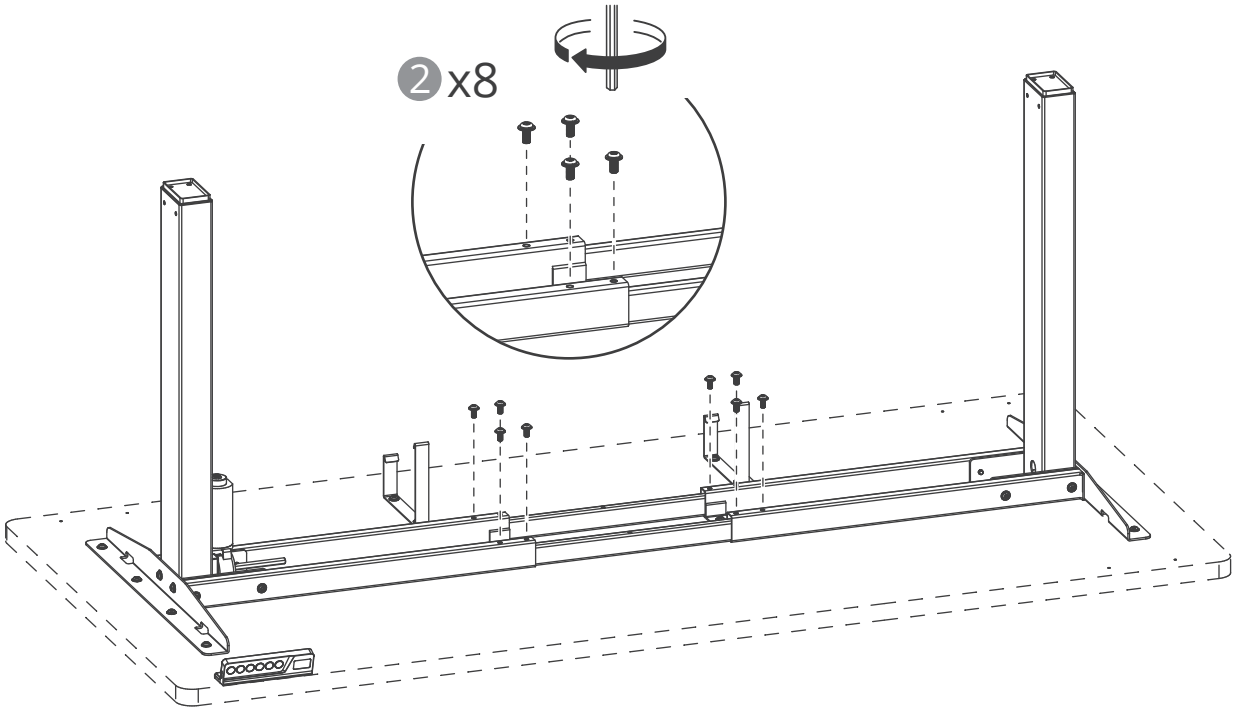

14

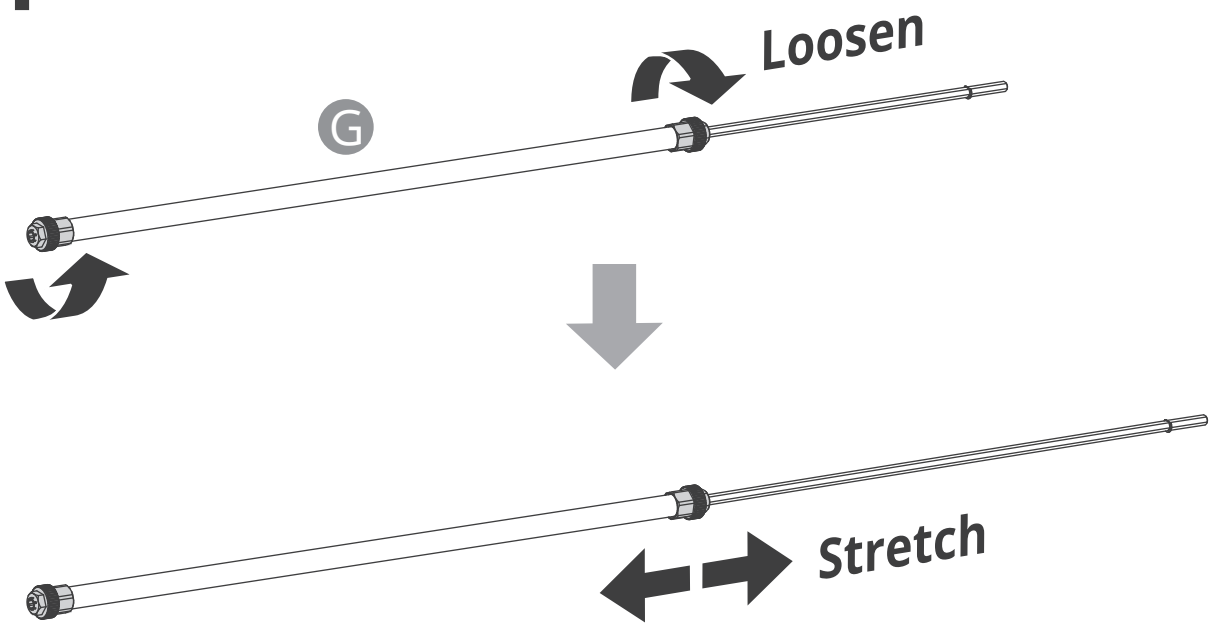

15

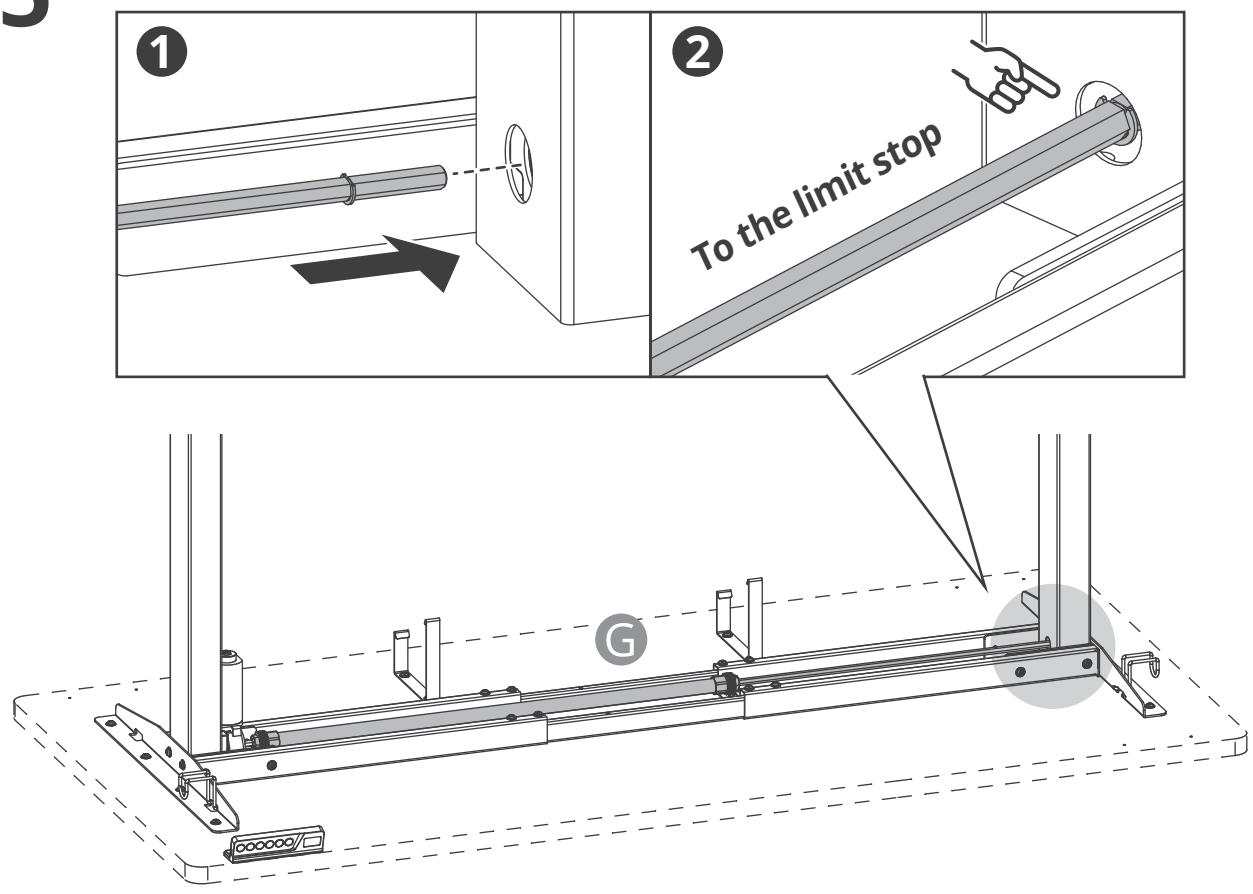

Leveling Adjustment for the Legs

1 **Ensure both legs are at the same height.**

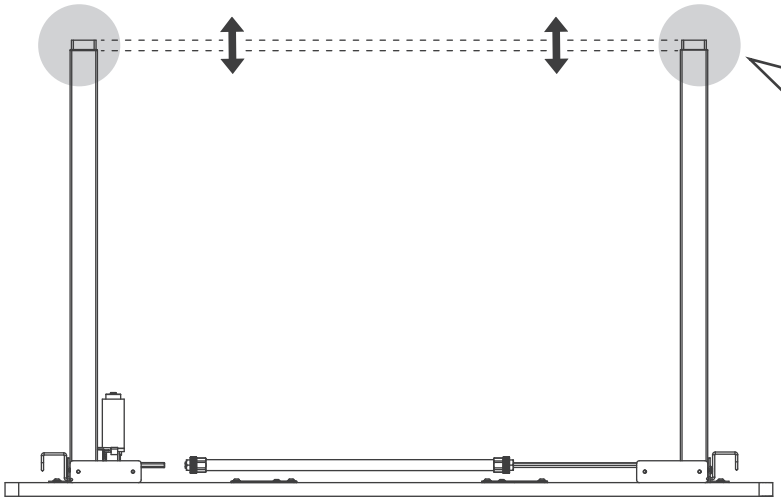

The gaps shown here must be identical, indicating horizontal alignment.

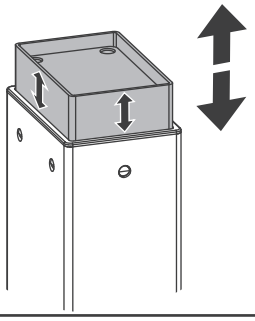

2 **Adjustment Procedure.**

Uneven Height

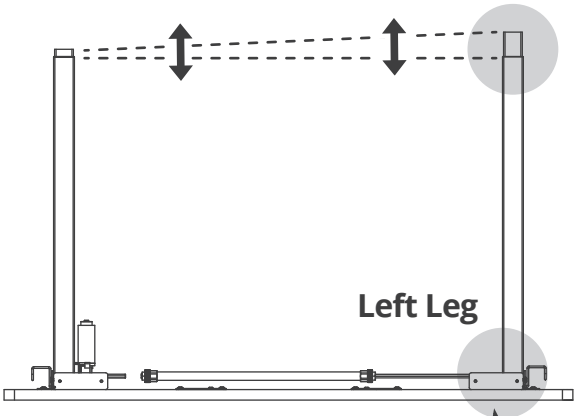

If the leg heights differ, **rotate the transmission rod** to align them.

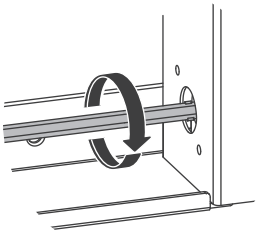

Level Aligned

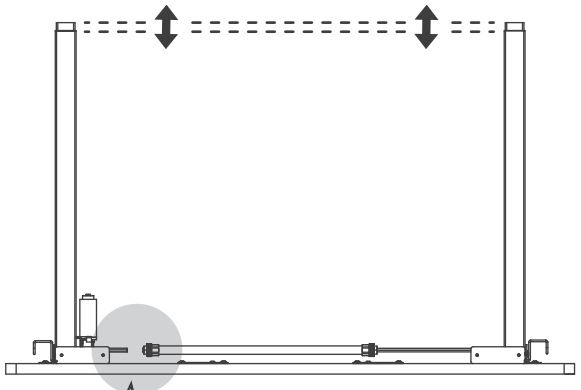

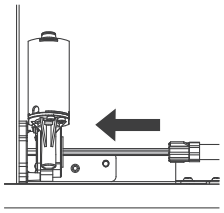

Important: Ensure both desk legs are fully lowered and completely level. Once leveled, slide the sync rod sleeve onto the sync rod on the motor side.

16

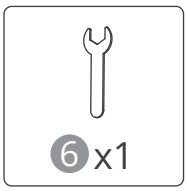
6 x1

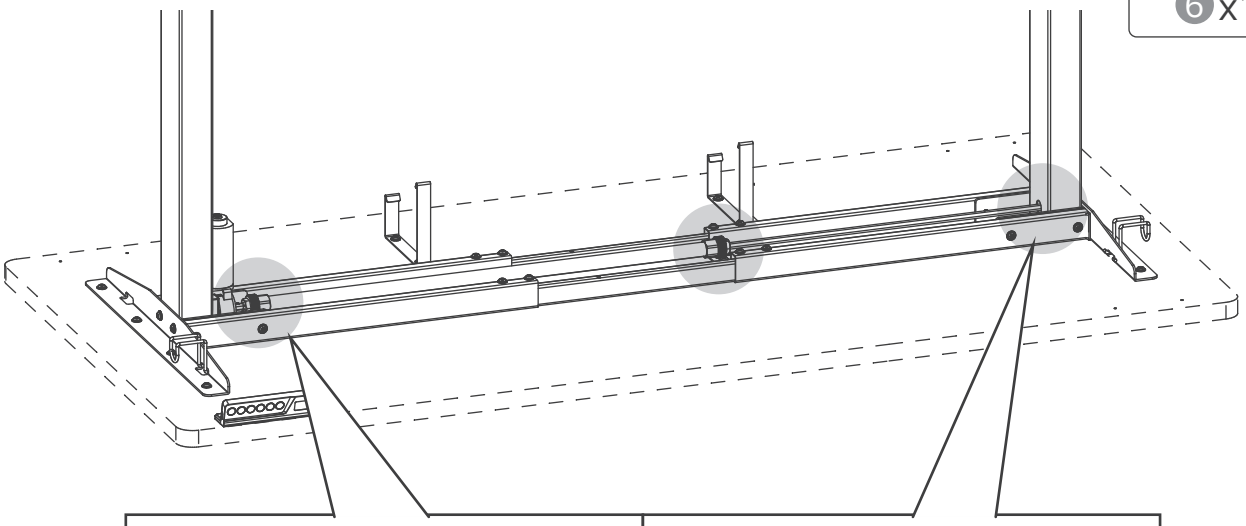

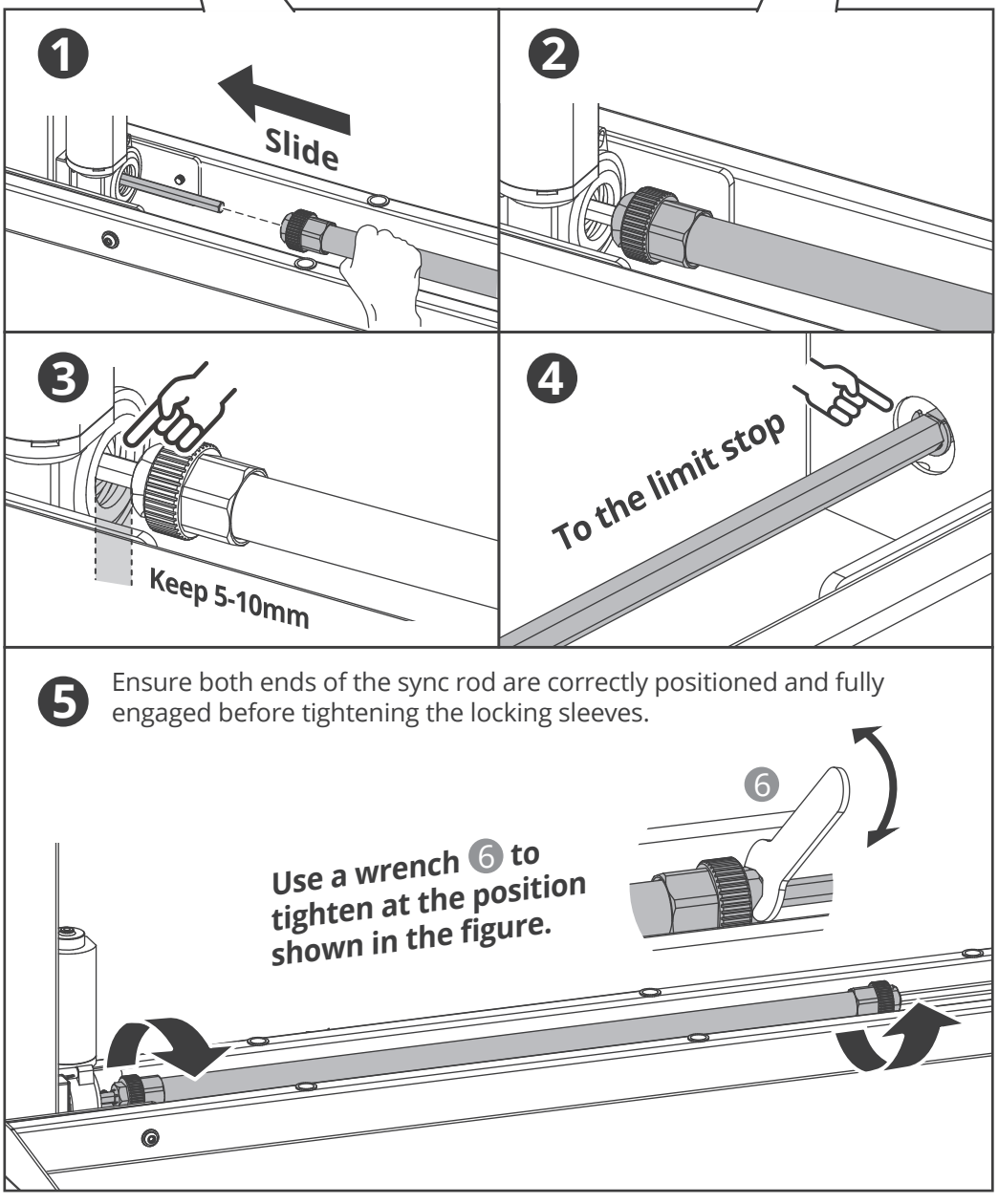
1
Slide
2
3
Keep 5-10mm
4
To the limit stop
5
Ensure both ends of the sync rod are correctly positioned and fully engaged before tightening the locking sleeves.
6
Use a wrench 6 to tighten at the position shown in the figure.

17

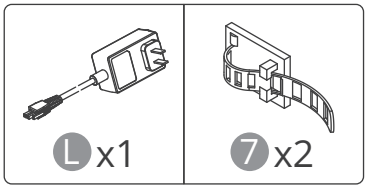

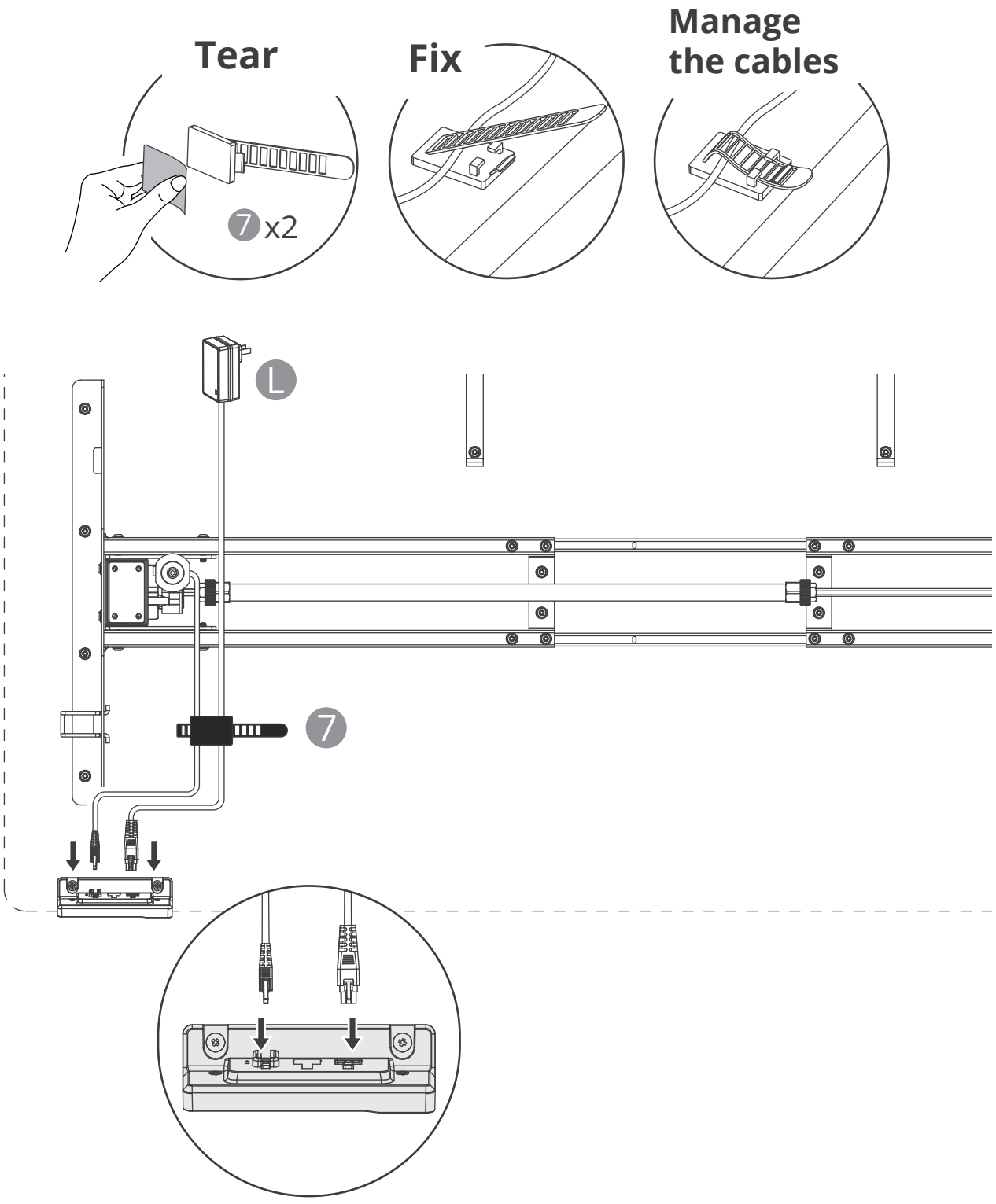

18

Note: There are 4 available mounting positions. You can install the two accessory hooks in whichever 2 locations you prefer.

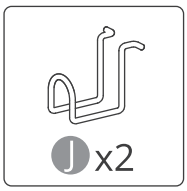

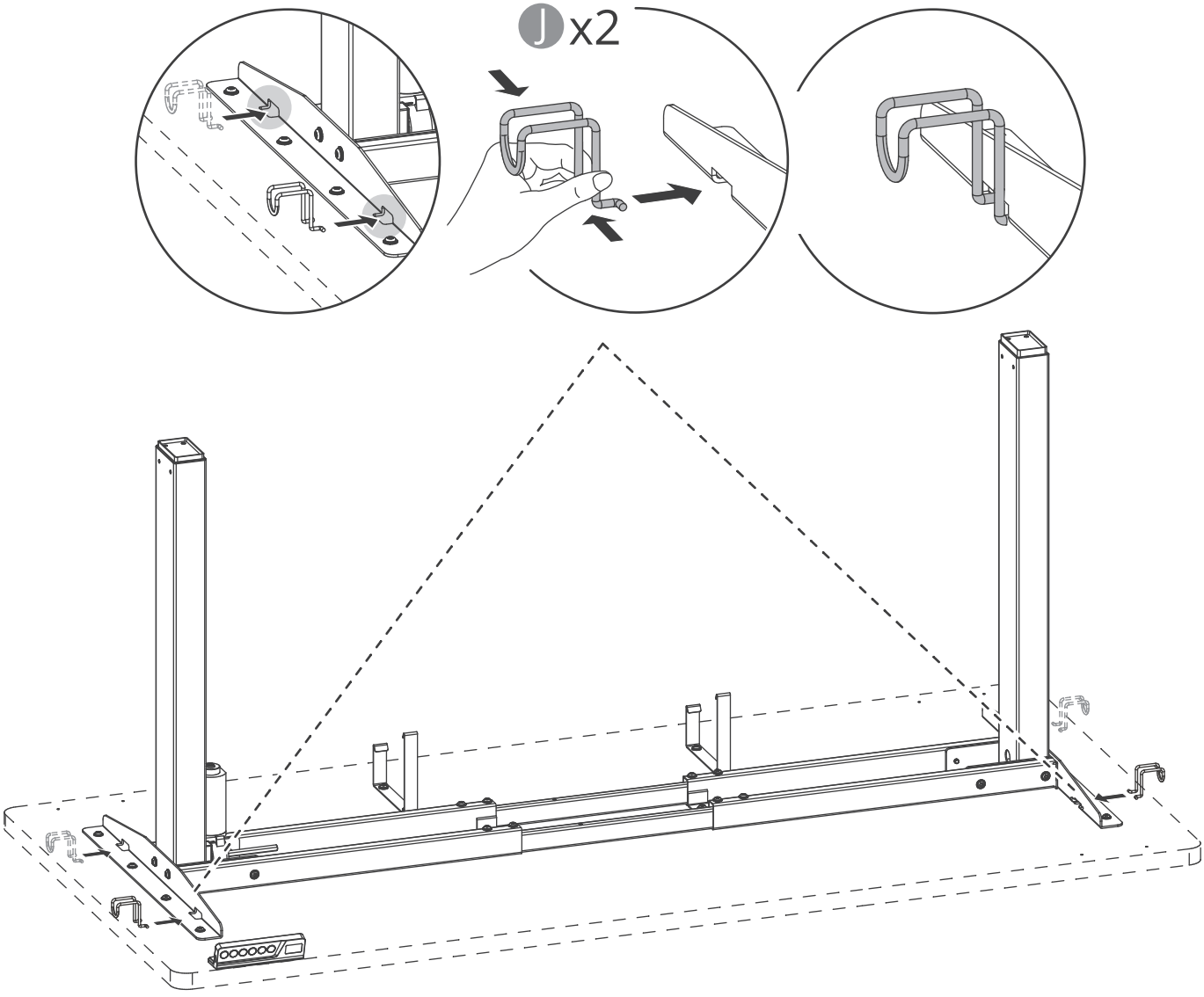

19

The recommended torque for the locking frame screws is **15 N·m**; please ensure the screws are tightened for a more stable table.

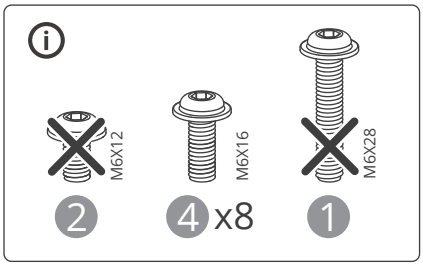

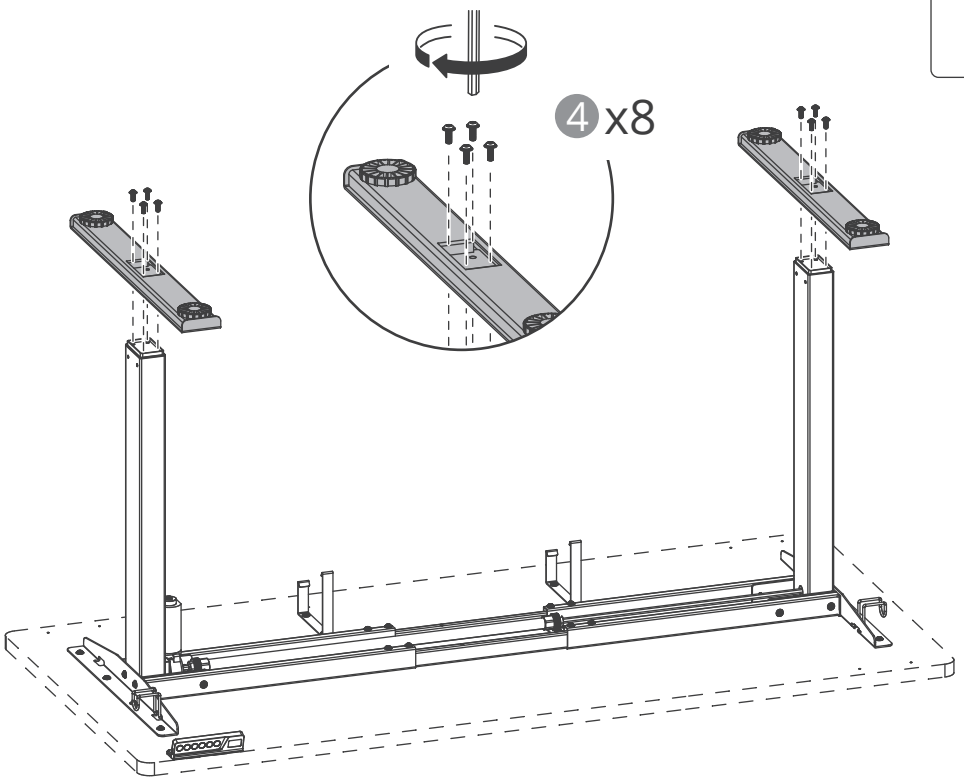

20

Note: Do not rest any weight on the keypad during the flip.



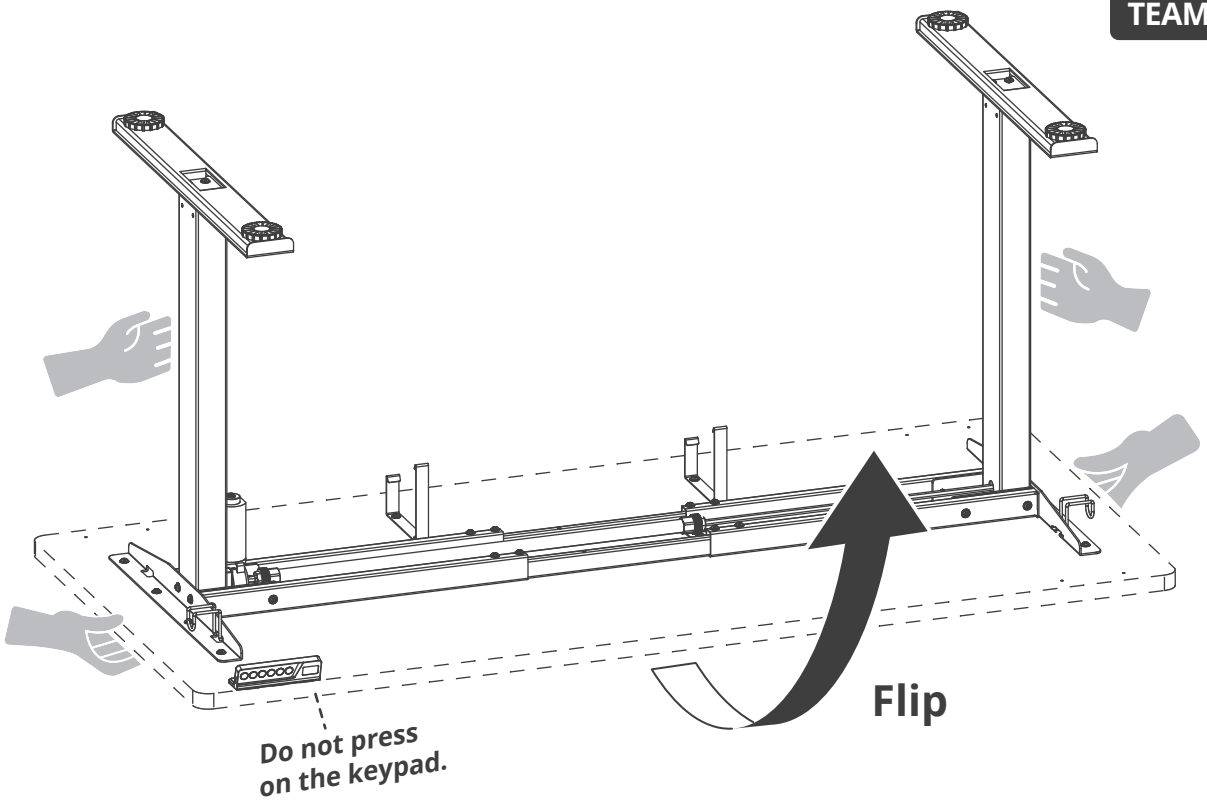

21

Note: To prevent scratching the finish, assemble and fold the metaldrawer on a softclean surface, such as a carpet or blanket.

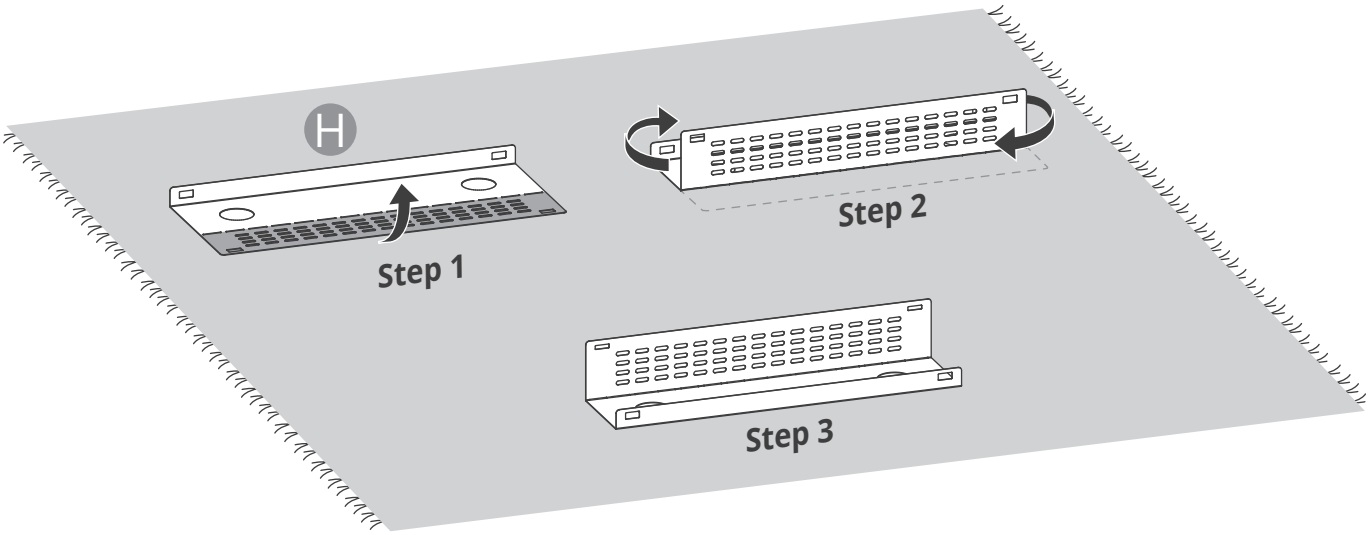

22

Note: Use the Velcro straps to bundle cables or secure them to the cable management tray through the slots.

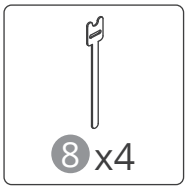

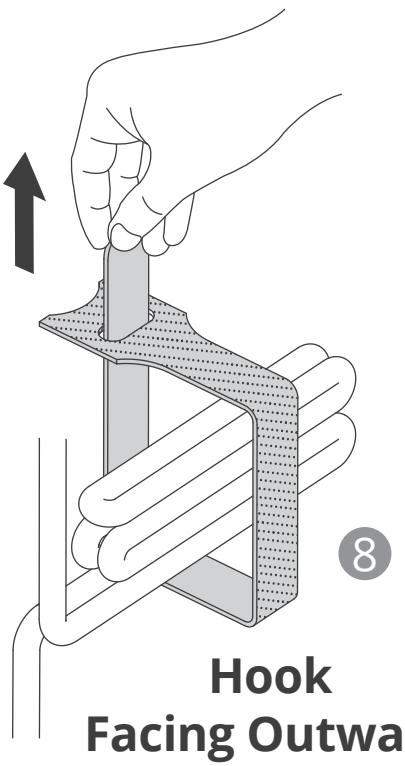

Hook
Facing Outward

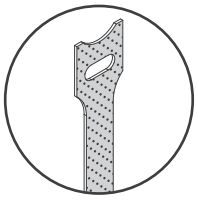

Hook
(Rough)

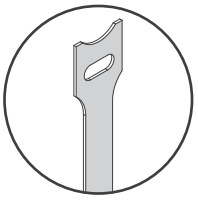

Loop
(Soft)

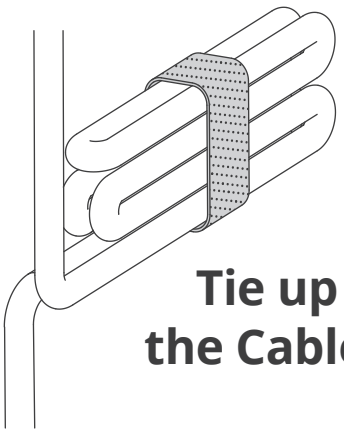

Tie up
the Cables

23

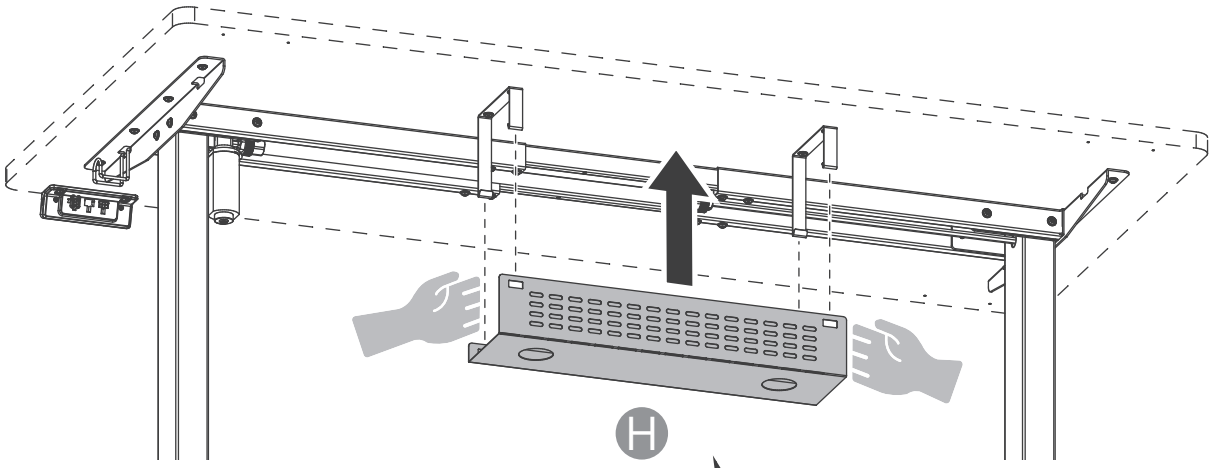
H

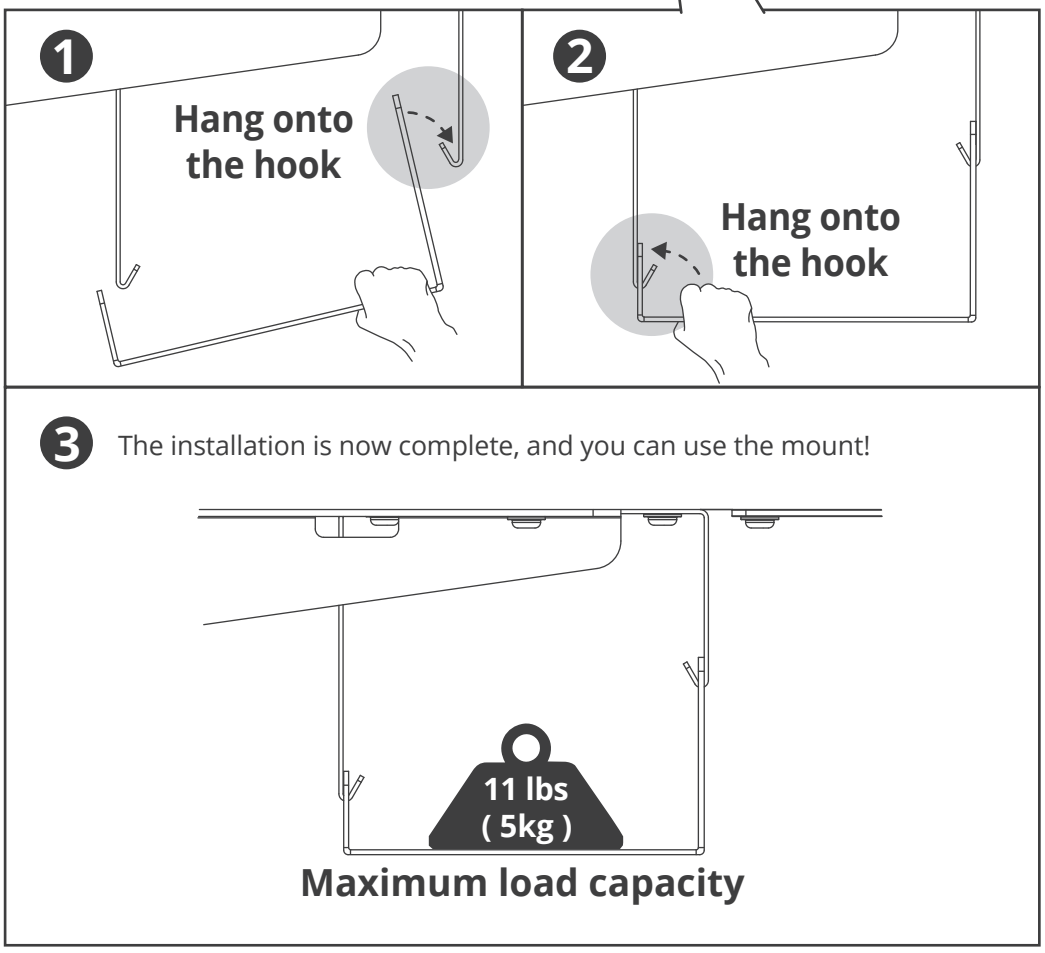
1
Hang onto
the hook
2
Hang onto
the hook
3
The installation is now complete, and you can use the mount!
11 lbs
(5kg)
Maximum load capacity

24

You're amazing!
The installation is now complete.
Enjoy your Standing Desk!

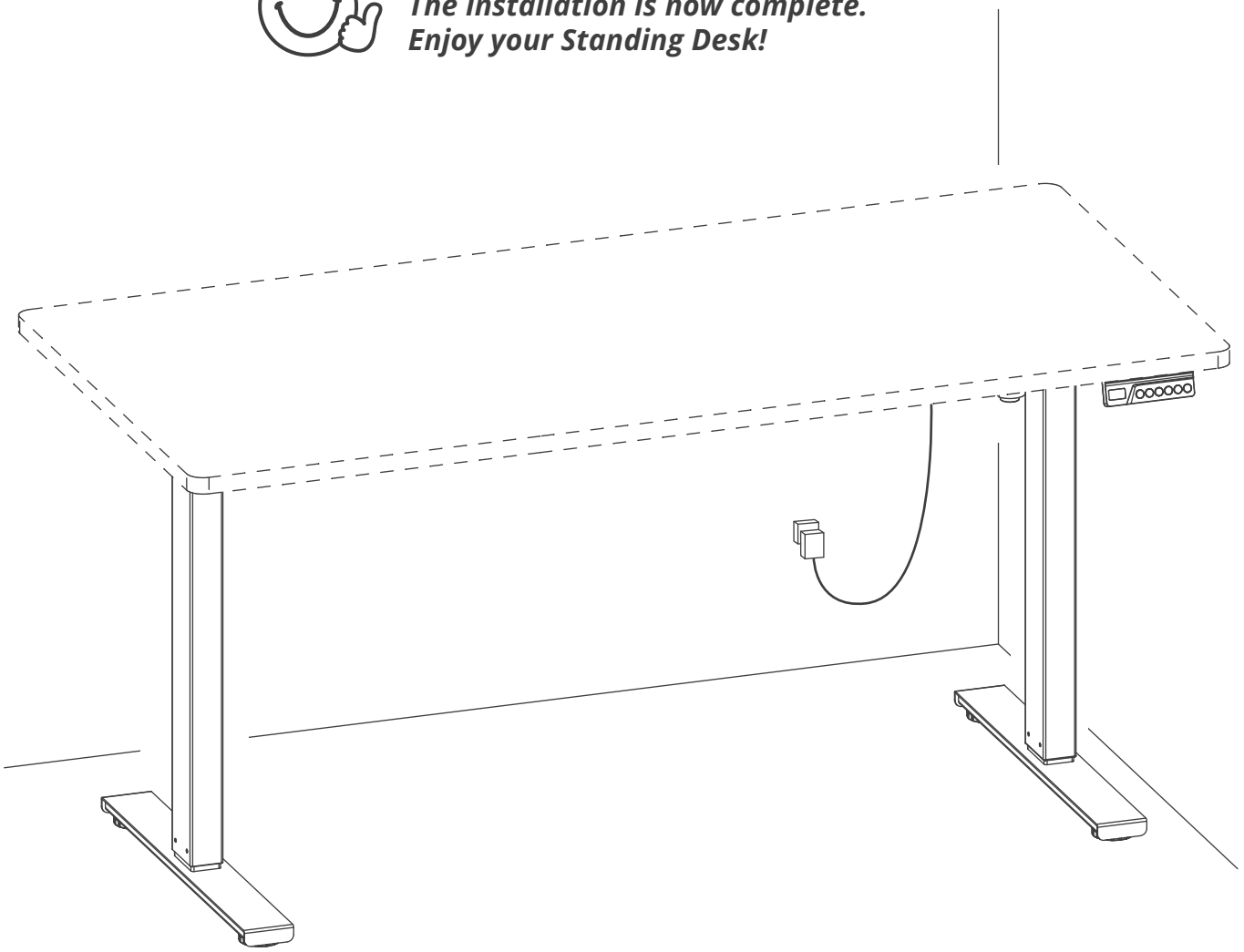

Handset User Guide

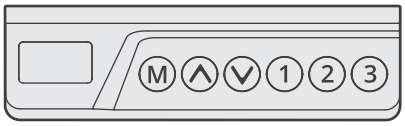

Connect Power

- Connect the control box to the power adapter.
- Plug the power cord into a grounded electrical outlet.
- The display will show the current desk height.

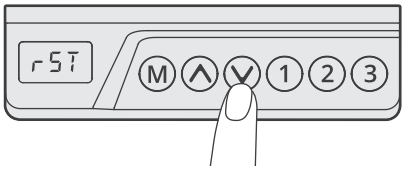

Reset (First Use or Reassembly)

- Press and hold the ⌄ button until the desk stops for 5 seconds. Code rST will appear on the display.
- Continue holding ⌄ until the legs move to the lowest position, rebound slightly, and stop.
- Release ⌄ . Reset is complete.
- If interrupted, repeat the reset until successful.

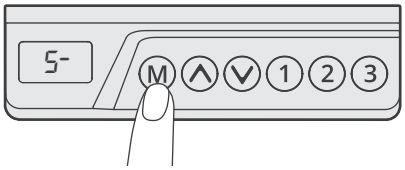

Memory Presets: Save a Height

- Adjust desk to desired height.
- Press the M . Display shows S- .
- Press one of the preset keys (1 , 2 , or 3).
- Height is saved. Memory is retained even after power off.

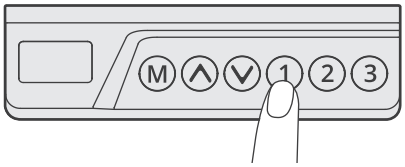

Memory Presets: Recall a Height

- Press the chosen preset key (1 , 2 , or 3) .
- The desk moves automatically to the stored height.
- Press any key to stop movement.

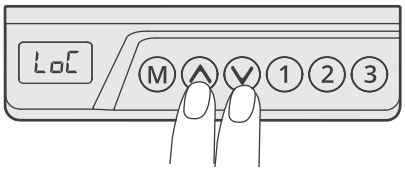

Child Lock

- **Lock**: Press and hold ^ + ⌄ for 5 seconds. Display shows LoC .
- **Unlock**: Repeat the same action for 5 seconds. Display returns to numbers.

Menu Settings

- Enter Menu: Press and hold M for 5 seconds.

Options

- PC0–PC5: Upward collision sensitivity (0 = off; 1–5 = increasing sensitivity).
- dC0–dC5: Downward collision sensitivity.
- U-0/U-1: Display units (cm/inch).

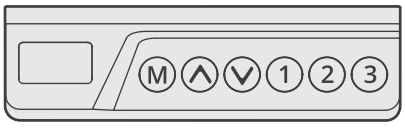

- **Navigate**: Short press M to switch options.
- **Adjust**: Use ^ / ⌄ to change values.
- **Save & Exit**: Hold M until progress bar completes.
- Auto exit after 10 seconds of no operation.

Energy-Saving Mode

- After 1 minute of no operation, the display turns off.
- Press any button to wake.

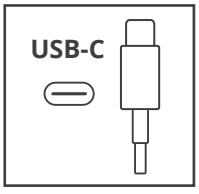

USB-C Quick Charge Port

· 22 W USB-C PD fast charging.
· Compatible with most USB-C powered devices.
· Charge devices while you work.

Error Codes & Troubleshooting

Code	Meaning	Solution
SC0	Self-test failure (standby current)	Reconnect power. Replace handset if needed.
SC1	Power supply voltage error	Reconnect power. Replace handset or adapter if issue persists.
HOT	Overheating protection	Wait ~18 minutes. Error clears automatically.
r-6	Power voltage abnormal	Clears once voltage recovers. Replace handset/adapter if frequent.
rst	Reset not complete	Perform reset again.
E11	Overload protection	Wait 20 sec. Reduce load or check mechanism.
E12	Motor phase missing	Check motor cables. Reconnect and reset. Replace motor cable or handset if issue remains.
E13	Motor hall signal error	Check and reconnect motor cables, then reset. Replace motor cable or handset if issue remains.
E14	Obstruction detected	Legs retract ~5 cm / 1.97 in and stop. Clears automatically.
E15	Motor jam	Compare display with actual desk height and reset. If unresolved, inspect legs or motor.
E17	Mechanical fault	Inspect and replace motor/legs if defective.

Frequently Asked Questions（FAQ）

Q: The desk won't move.

A: Check all cable connections and ensure power is on. Perform a reset.

Q: The display shows the wrong height.

A: Reset the system to recalibrate.

Q: The desk stops during movement.

A: Check for overload or obstacles under the desk.

Q: Error code appears on display.

A: Refer to the Error Codes table above.