ASSEMBLY INSTRUCTIONS

48” Desktop

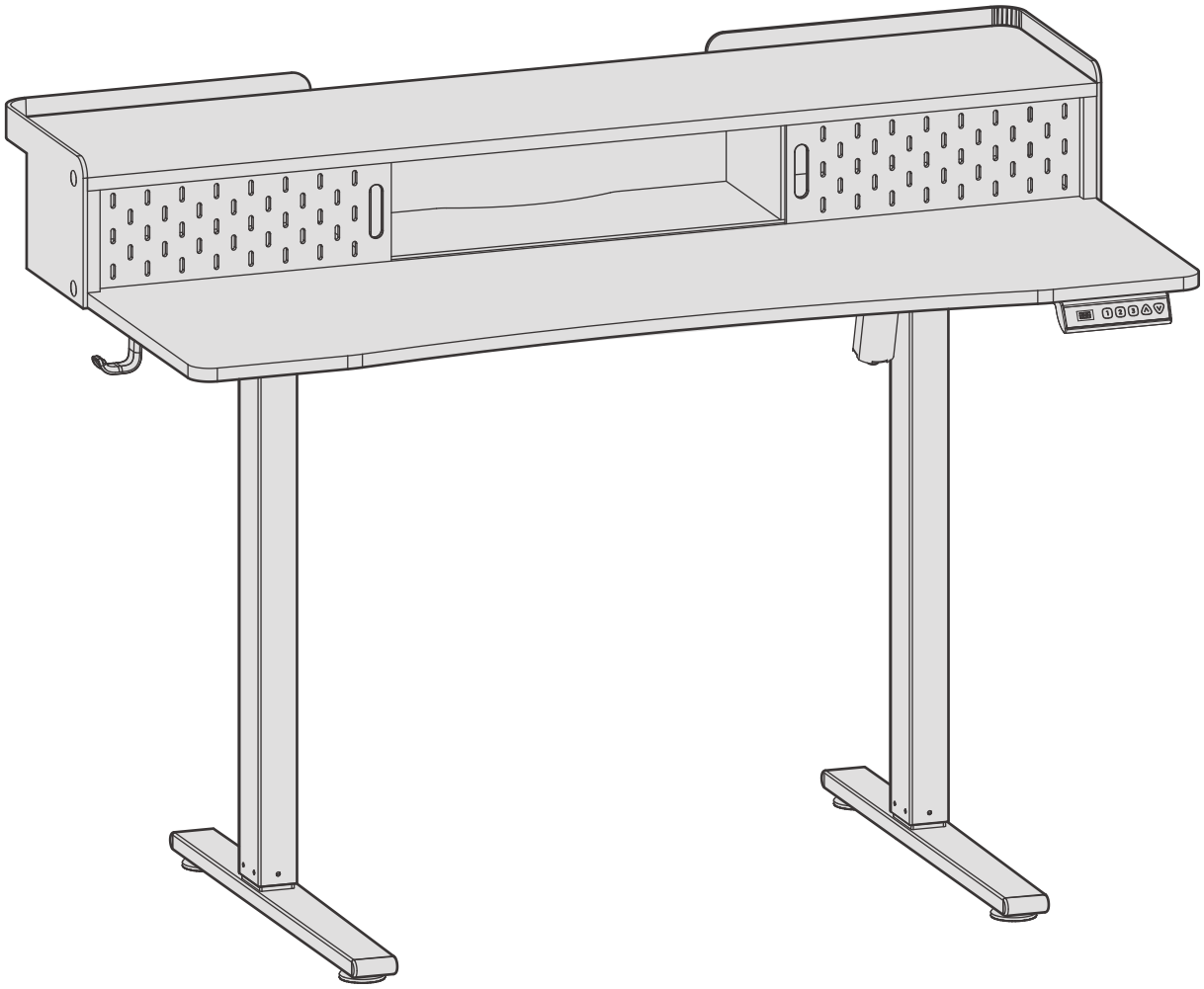

Scan QR code for installation video

support@yfs.life

yfs.life/SDE0234-ryi-net

Caution

- Keep children and animals away from the desk during use. Ensure the desktop is not touching any walls.
- Remove obstacles taller than 20 "/51 cm from underneath the desk.
- Operate only in a working environment temperature of 32 °F -104 °F/0 °C - 40 °C.
- Keep product away from corrosive gases, liquids and dusty objects.
- Keep hands, feet and other body parts in a safe position during operation. Anti-collision is not automatically enabled during all resets.
- The company does not bear any warranty or liability for damage and human injury caused by any abnormal or un-intended operation of the equipment.
- It is necessary to perform a manual reset after the initial installation or power cycling the equipment.

Pre-Installation Preparation

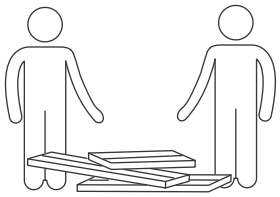	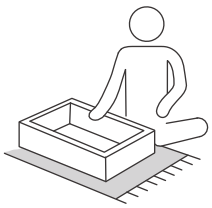	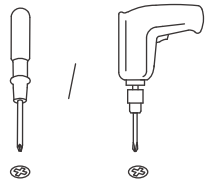	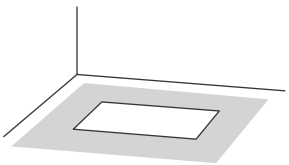
Complete through collaboration.	Assemble on a clean, flat, and protective surface.	Phillips screwdriver or drill required (not provided).	Allow an assembly area at least twice the desktop size.

PARTS LIST



1 x10
M6x34



2 x10
Ø15x11.5

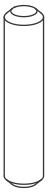

3 x12
Ø8x40



4 x6
ST5x14

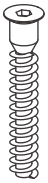

5 x8
M6x40



6 x16
M6x12

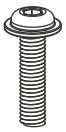

7 x10
M6x22

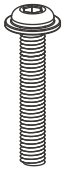

8 x11
M6x40

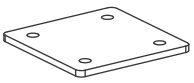

9 x2

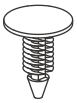

10 x12
Ø17x20

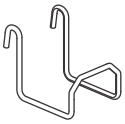

11 x2



12 x2



13 x1
4mm

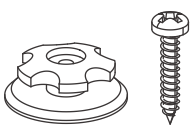

14 x4
ST4x25

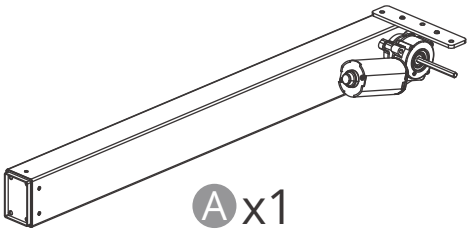

A x1

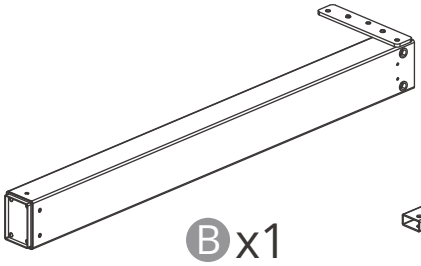

B x1

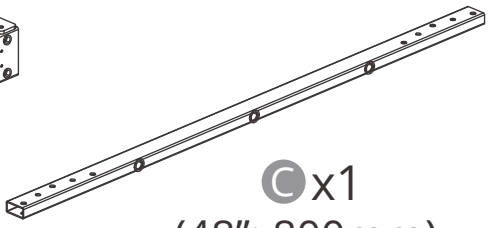

C x1
(48″: 800mm)

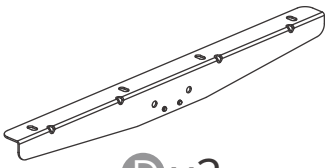

D x2
(48″: 400mm)

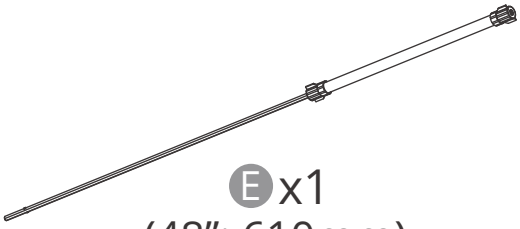

E x1
(48″: 610mm)

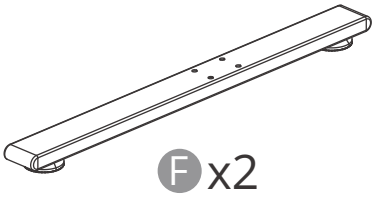

F x2
(48″: 590*50*20mm)

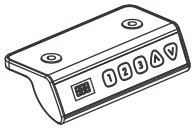

G x1

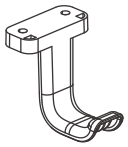

H x2

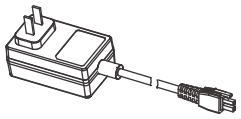

I x1

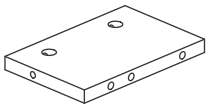

L x4

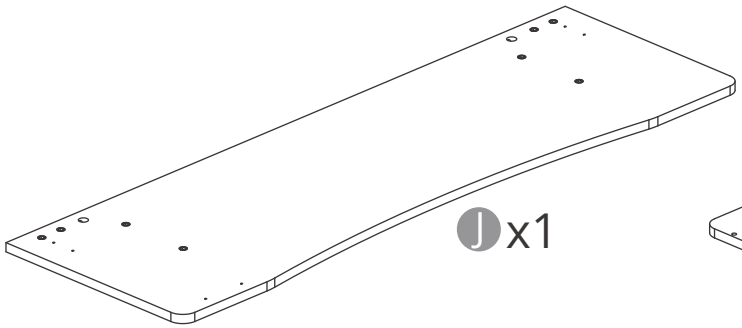

J x1

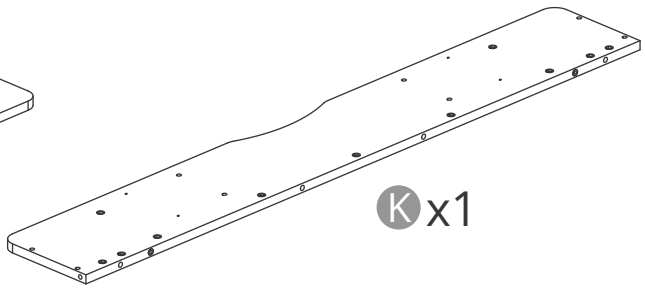

K x1

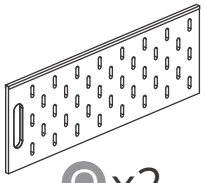

O x2

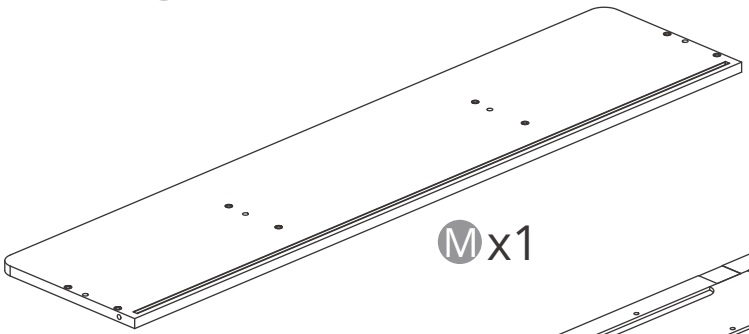

M x1

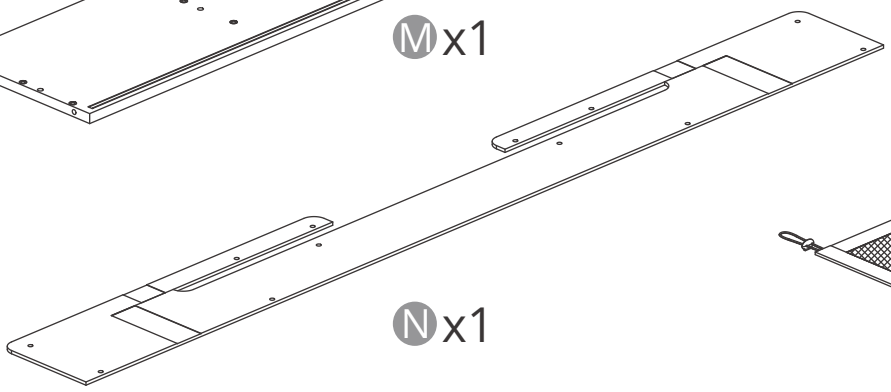

N x1

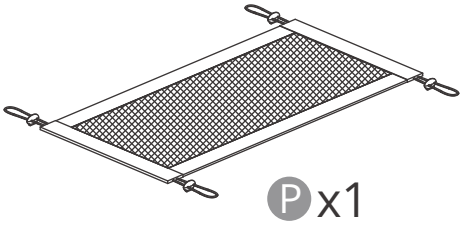

P x1

EXPLODED VIEW DIAGRAM

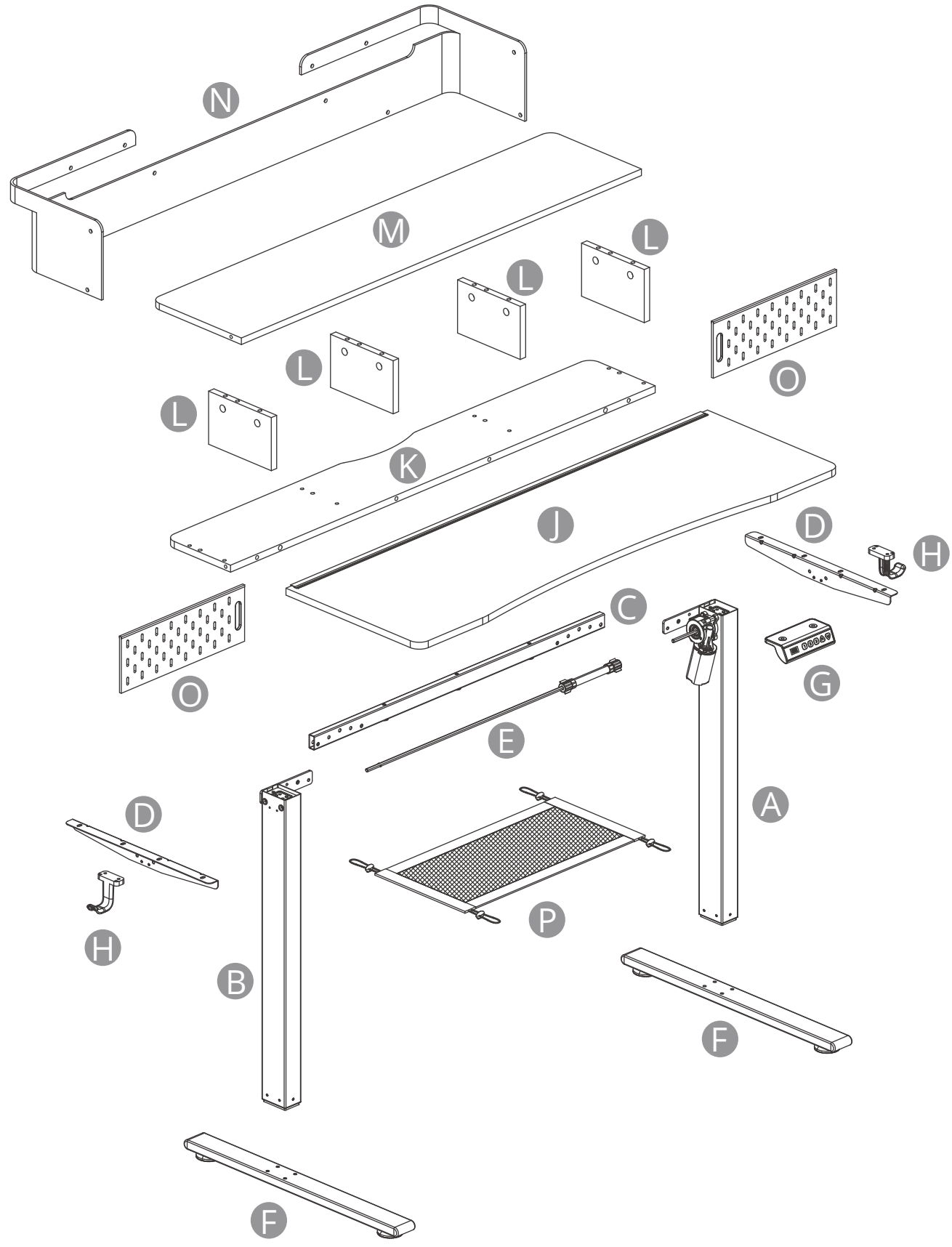

1

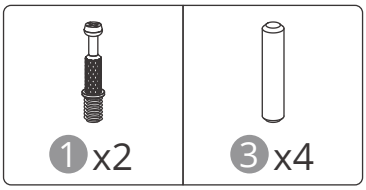

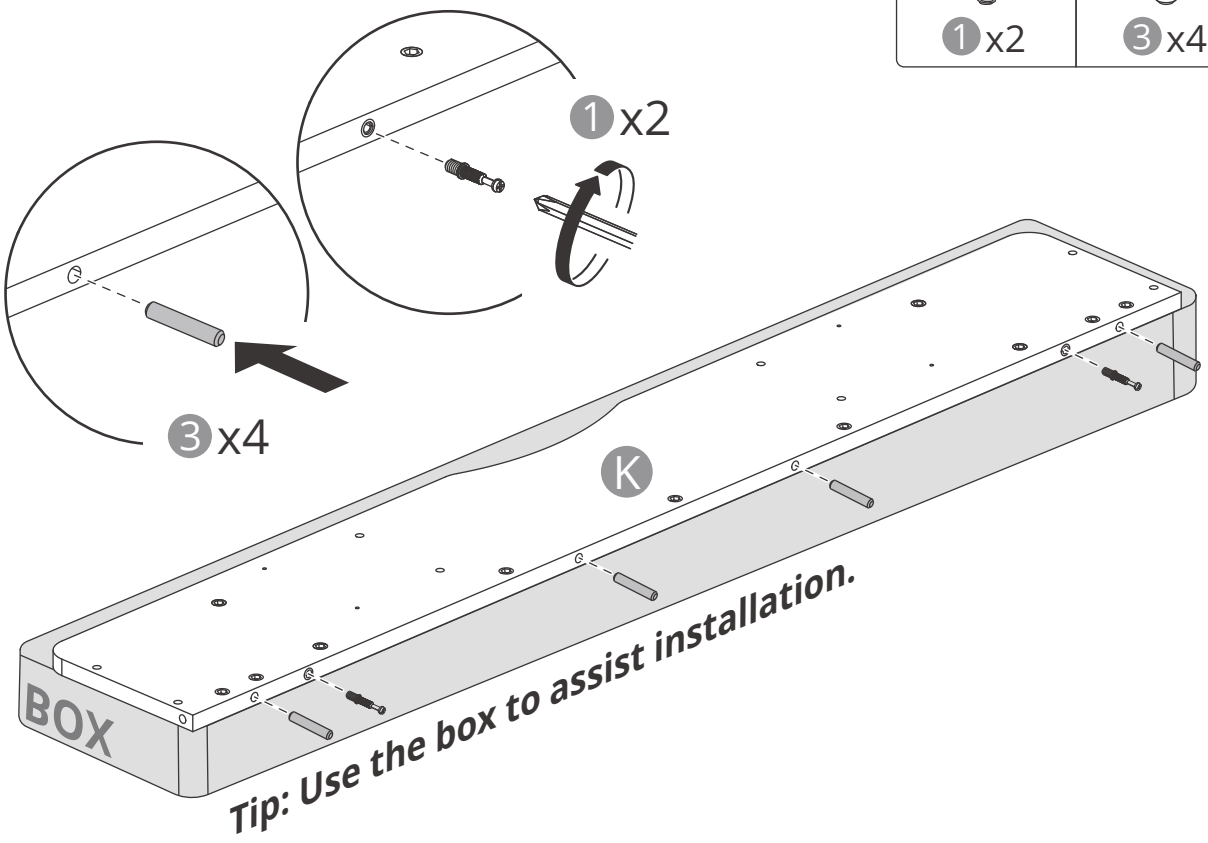

2

Note: Please place the desktop **on the carpet** for installation to prevent scratching the desktop.

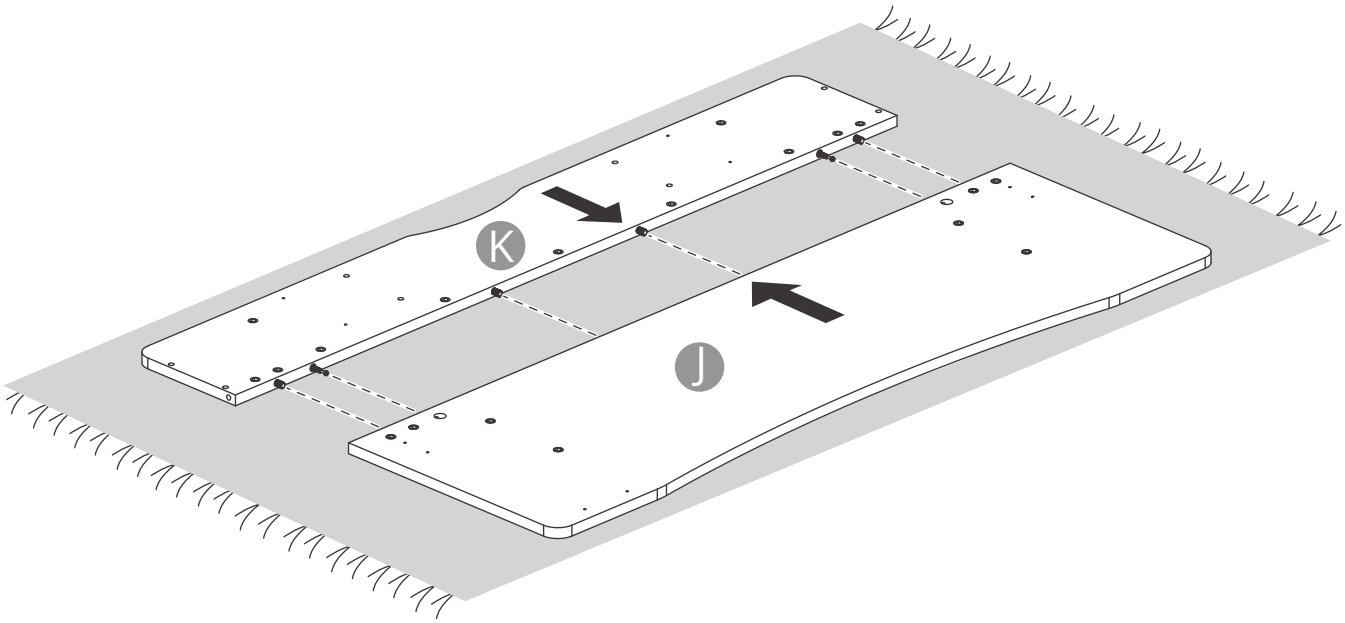

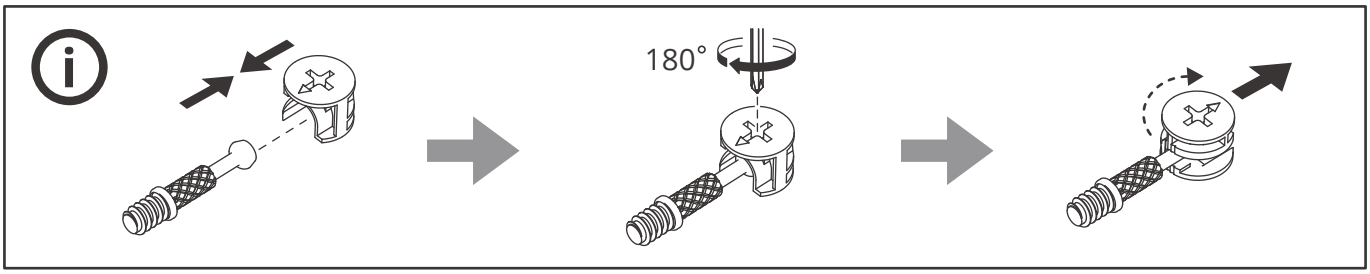

3 The recommended screw torque for locking the desktop is **6-8 N·m**; please keep the screws perpendicular to the mounting surface during installation. This will result in a flatter desktop.

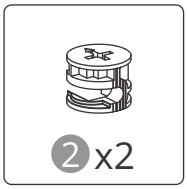

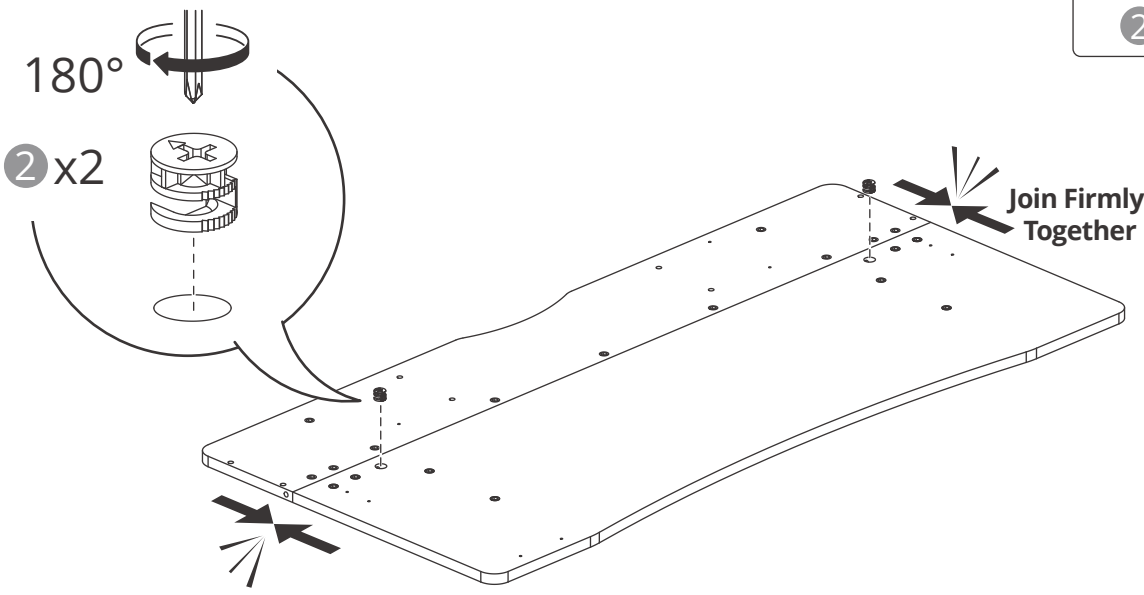

4 The recommended screw torque for locking the desktop is **6-8 N·m**; please keep the screws perpendicular to the mounting surface during installation. This will result in a flatter desktop.

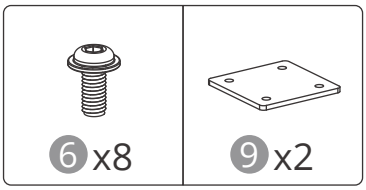

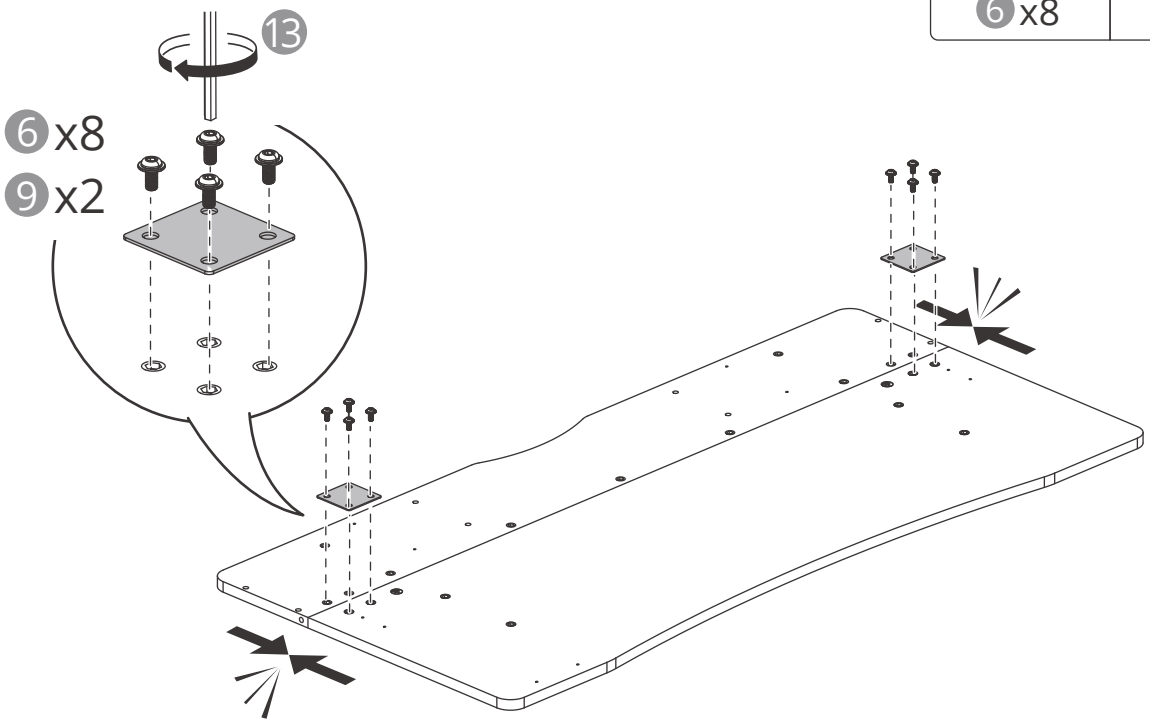

5

The recommended screw torque for locking the desktop is **6-8 N·m**; please keep the screws perpendicular to the mounting surface during installation. This will result in a flatter desktop.

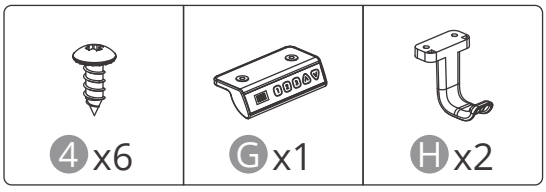

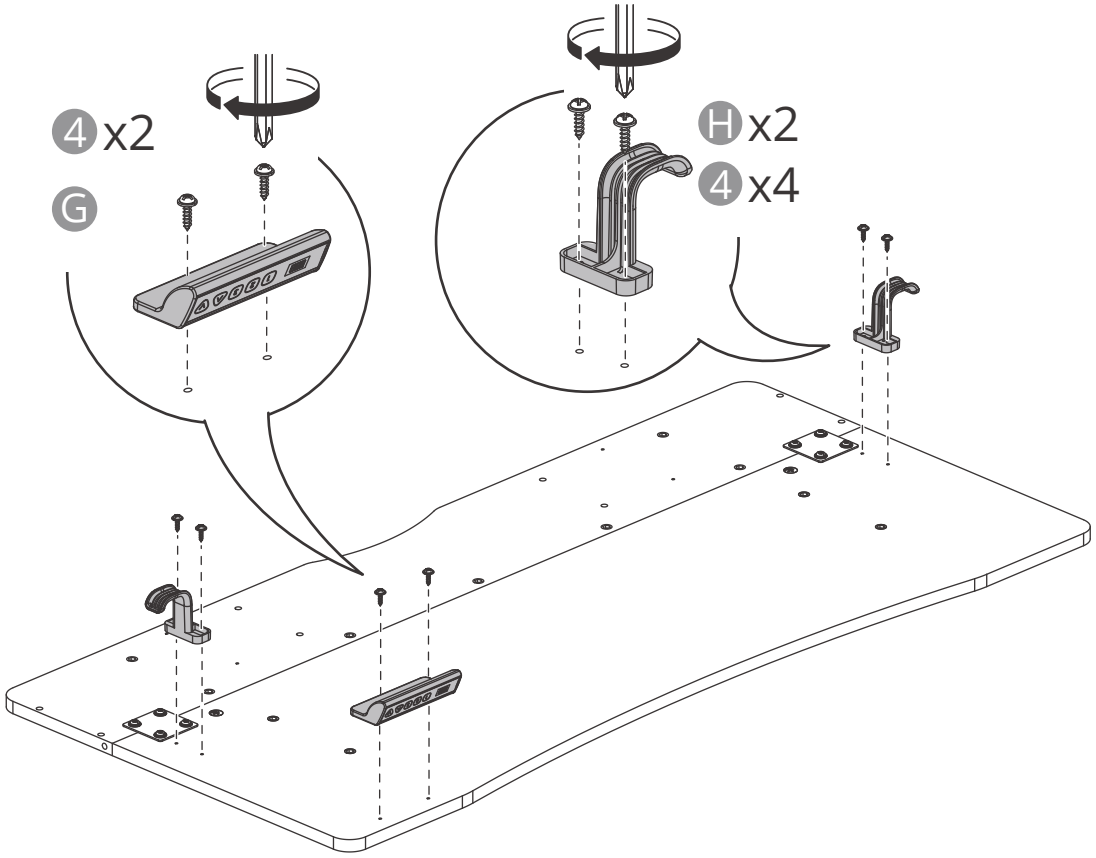

6

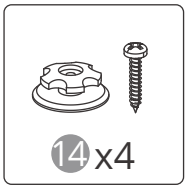

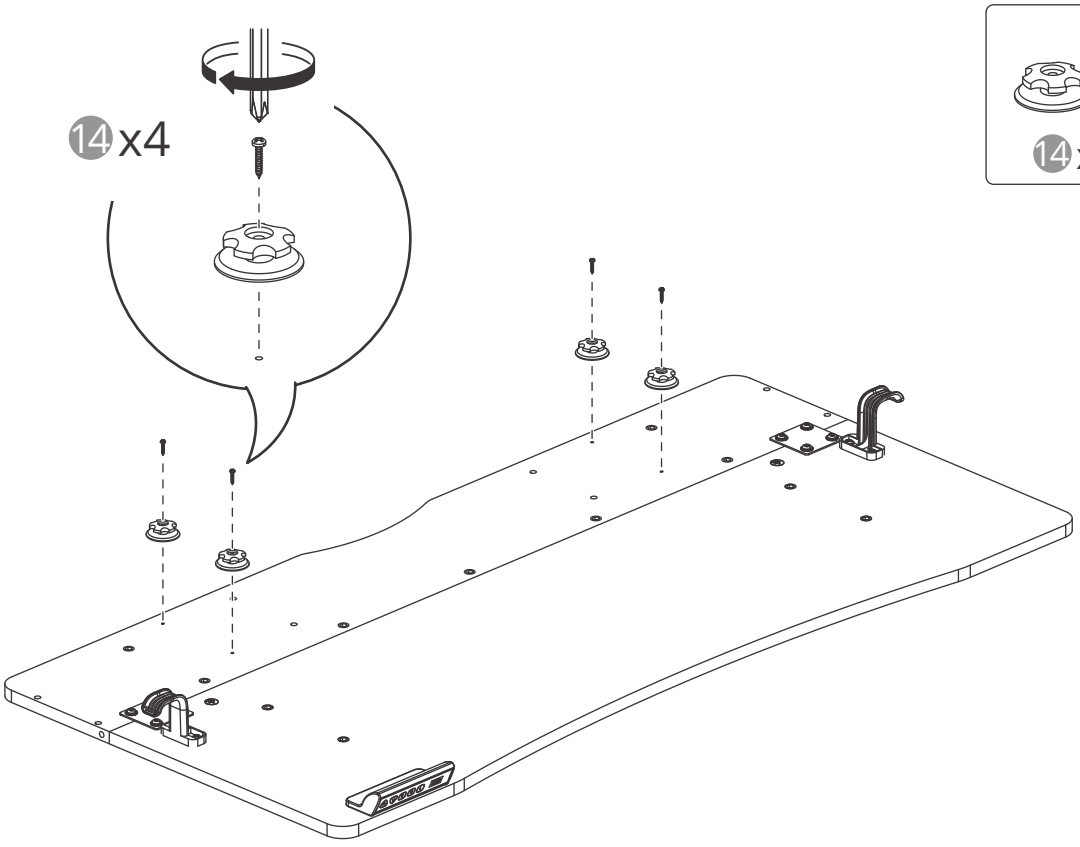

7

The recommended torque for the locking frame screws is **15 N·m**; please ensure the screws are tightened for a more stable table.

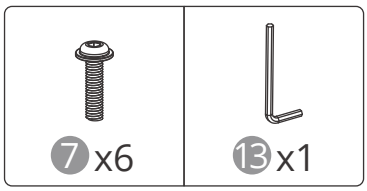

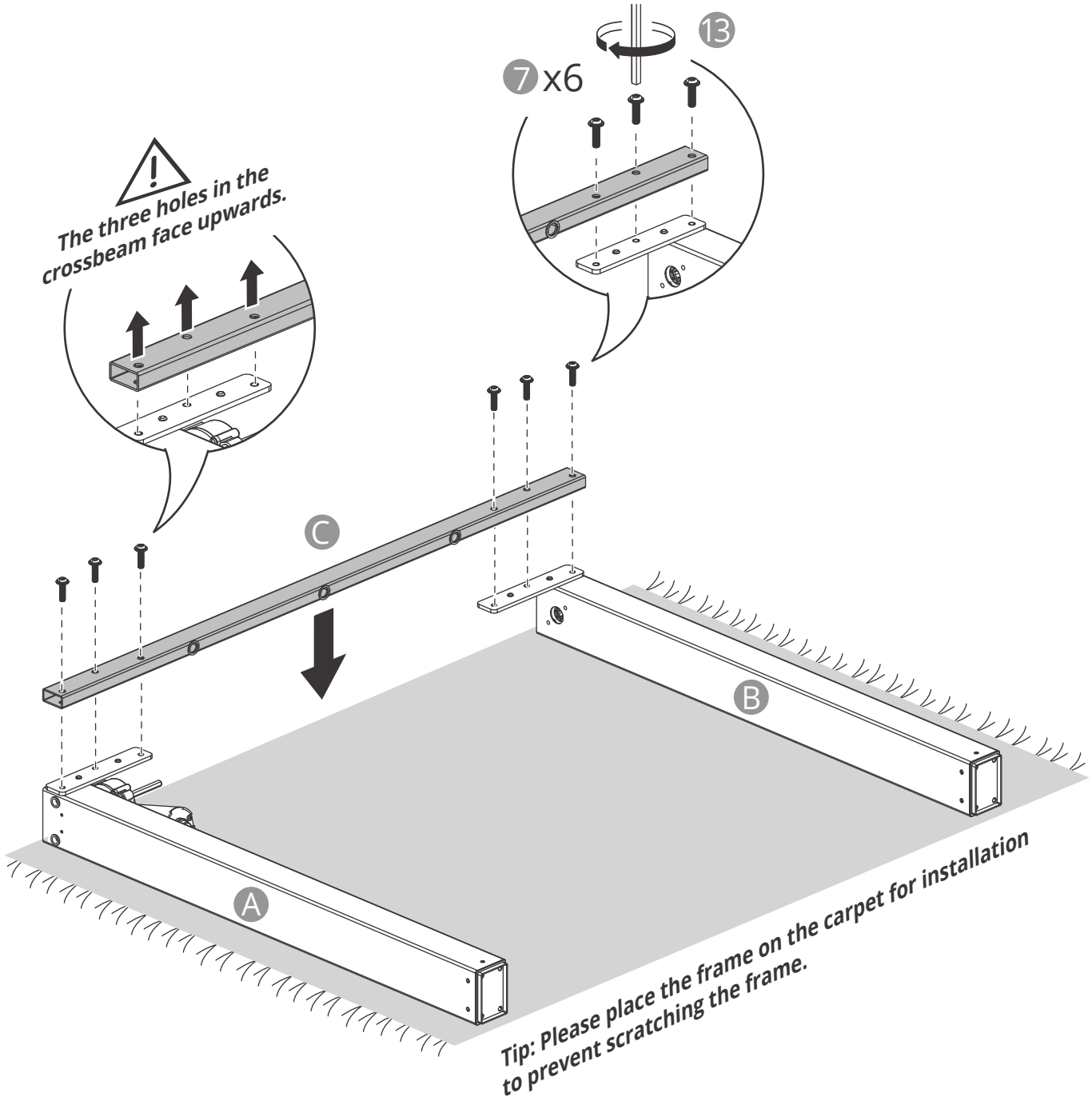

8

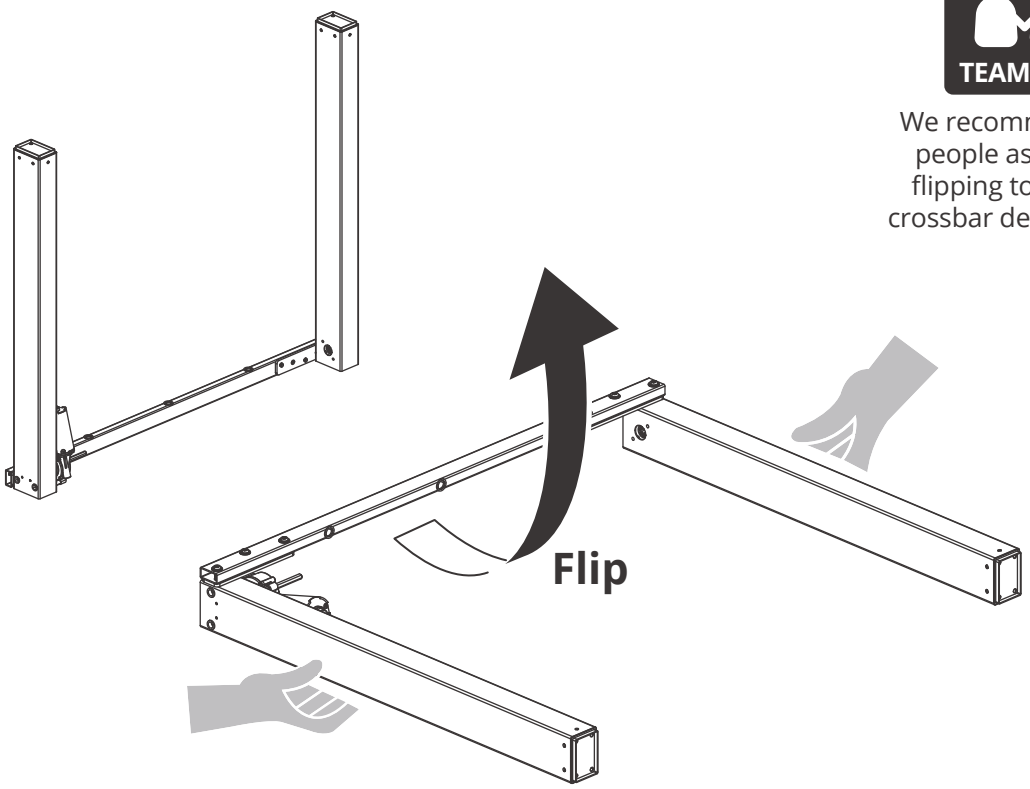

TEAM LIFT

We recommend two people assist with flipping to prevent crossbar deformation.

9

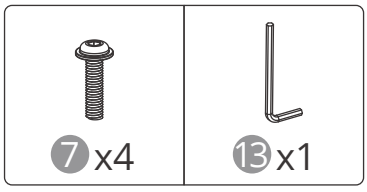

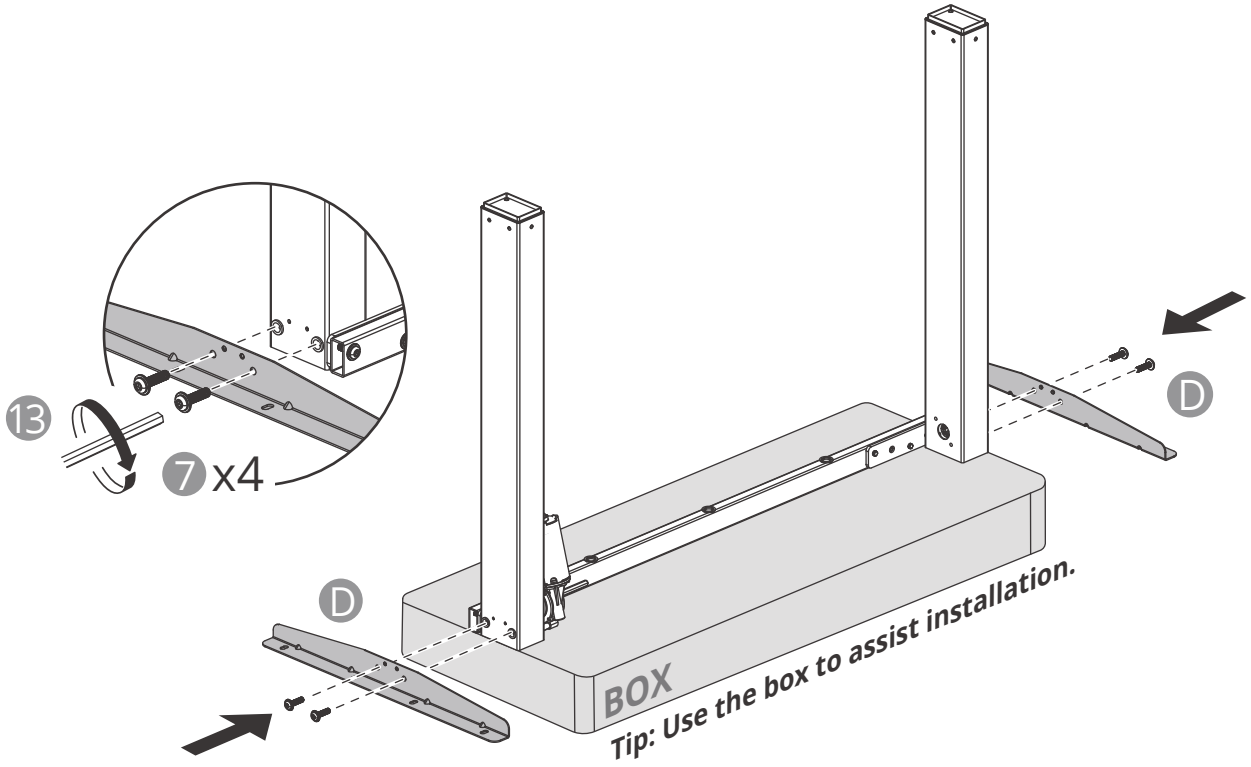

10

Ensure all holes are aligned before tightening the screws. The recommended screw torque for locking the desktop is **6-8 N·m**; please keep the screws perpendicular to the mounting surface during installation. This will result in a flatter desktop.

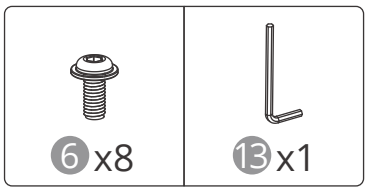

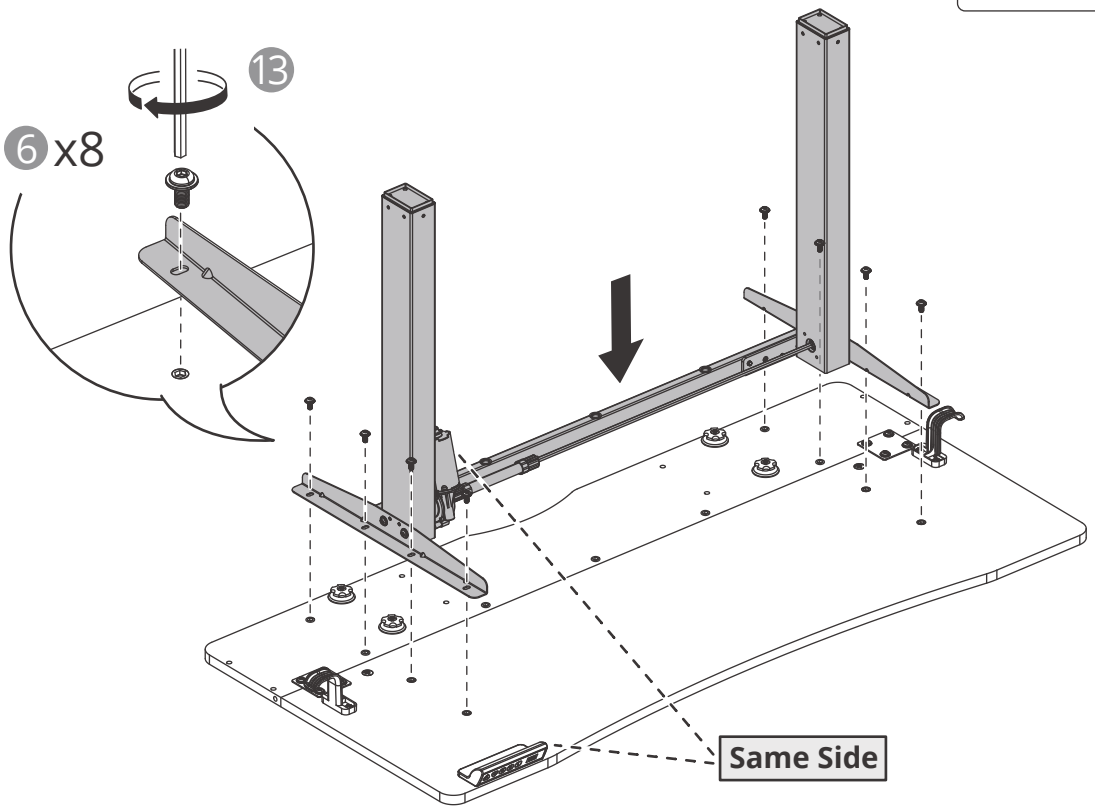

11

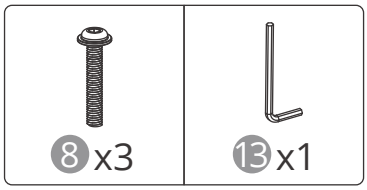

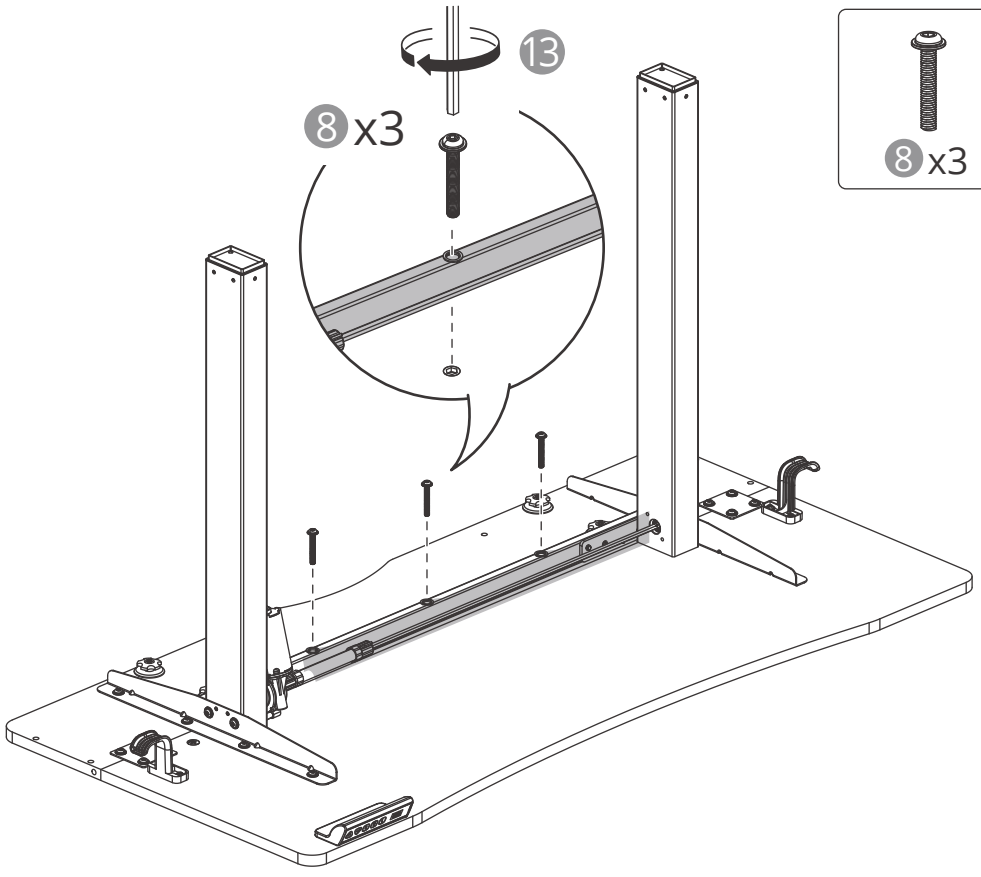

12

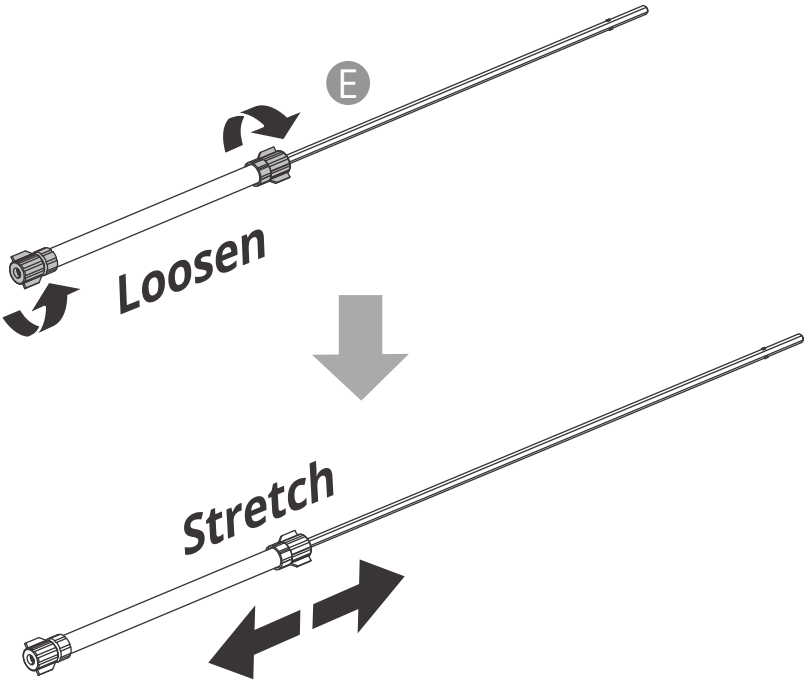

13

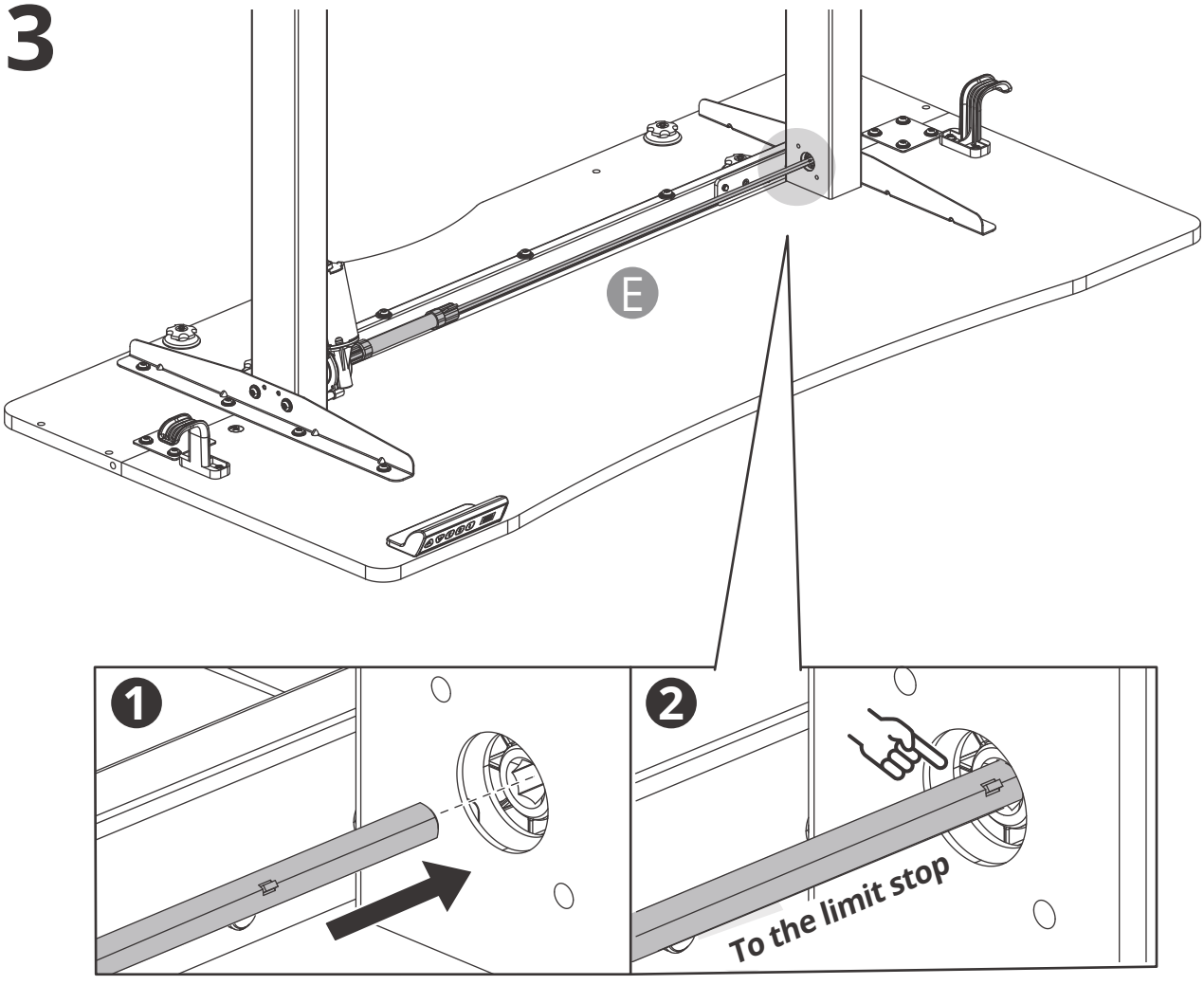

Leveling Adjustment for the Legs

1 **Ensure both legs are at the same height.**

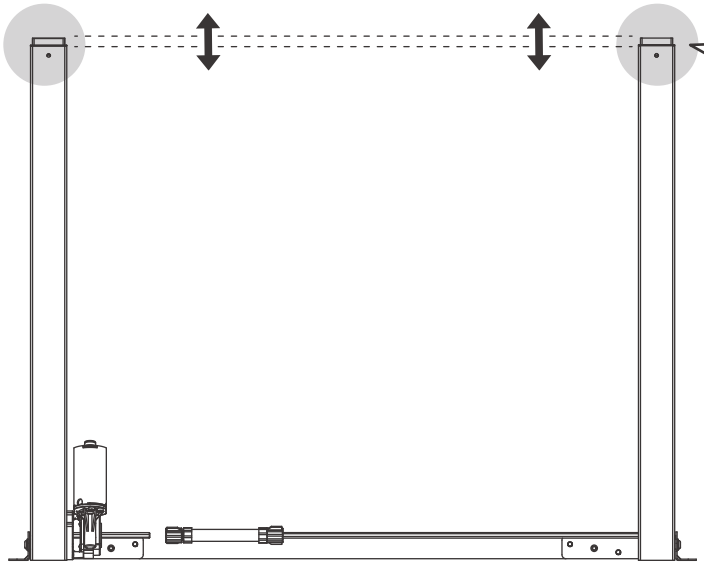

The gaps shown here must be identical, indicating horizontal alignment.

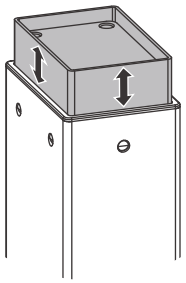

2 **Adjustment Procedure.**

Uneven Height

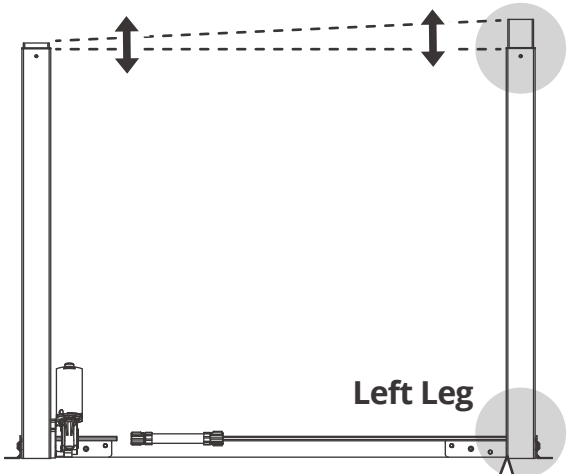

Level Aligned

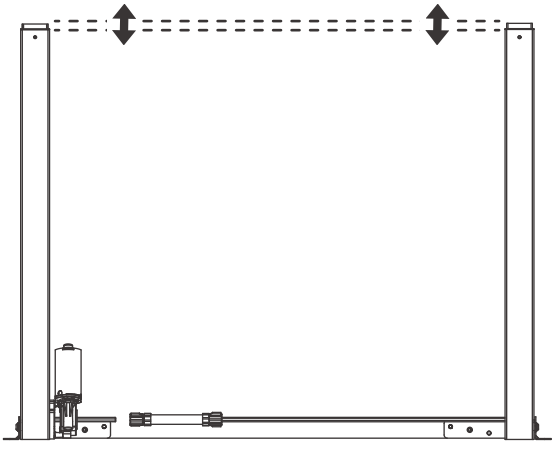

If the leg heights differ, **rotate the transmission rod clockwise** to align them.

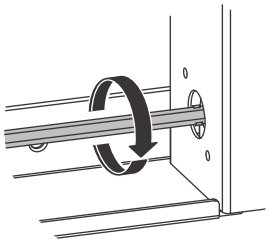

14

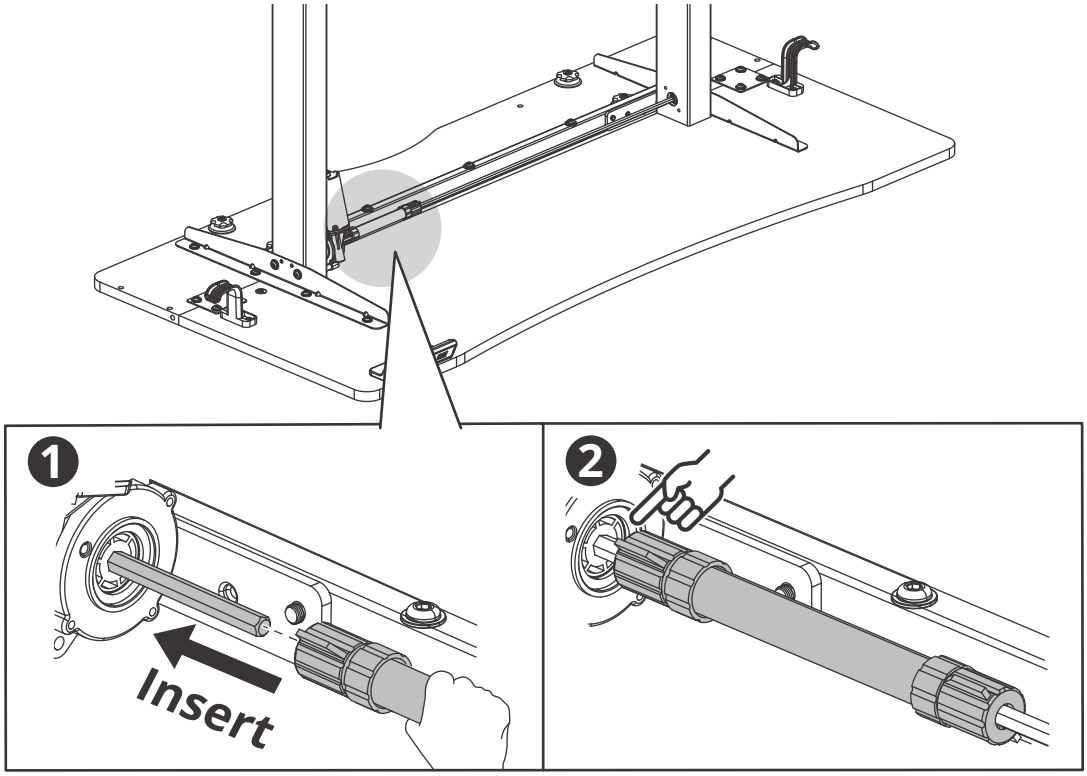

15

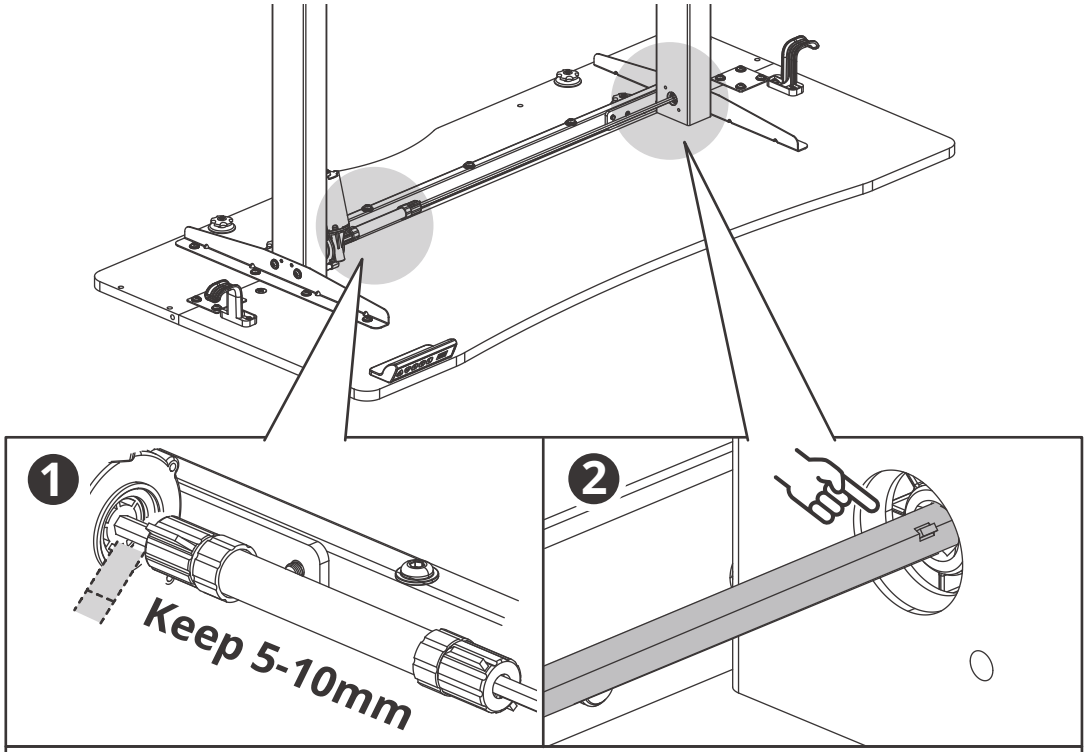

3 Ensure both ends of the sync rod are **correctly positioned** and **fully engaged** before tightening the locking sleeves.

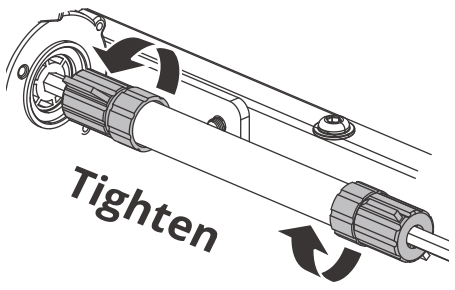

16

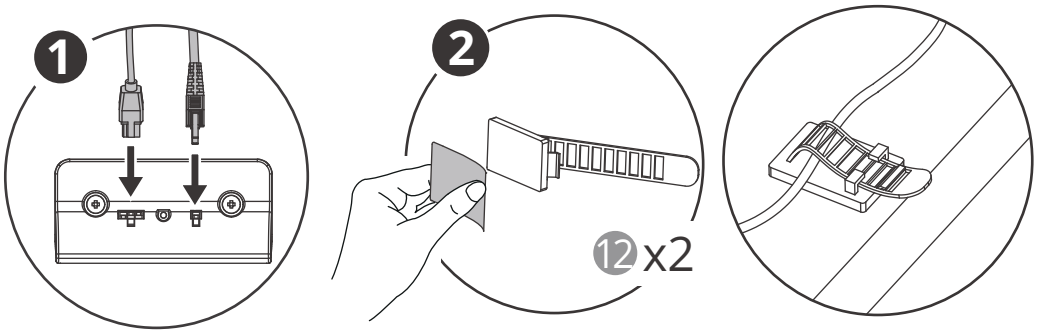
1
2
12 x2

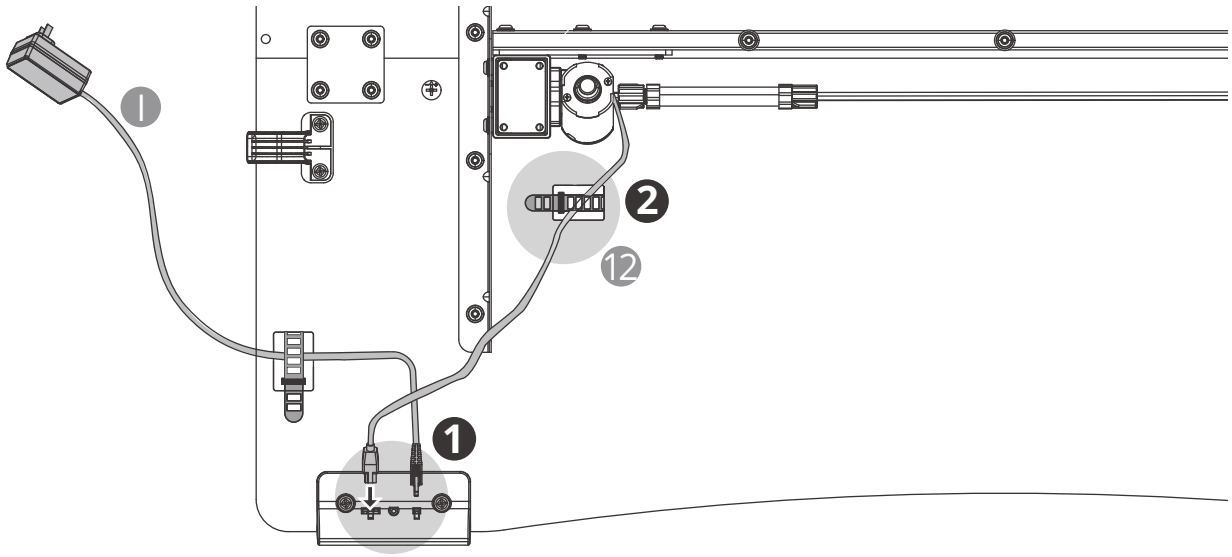
I
2
12
1

17

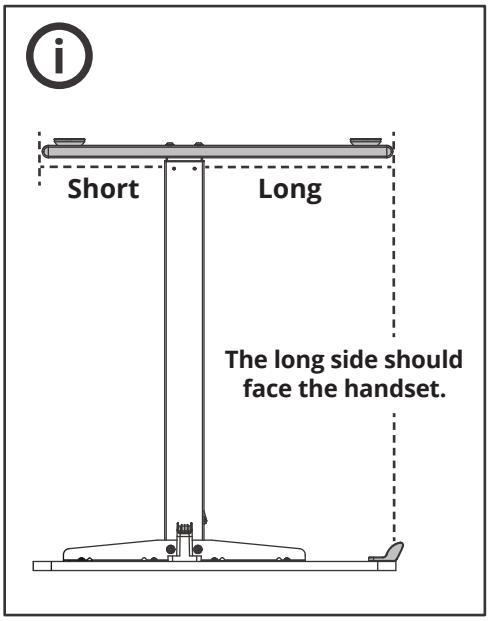
Short
Long
The long side should face the handset.

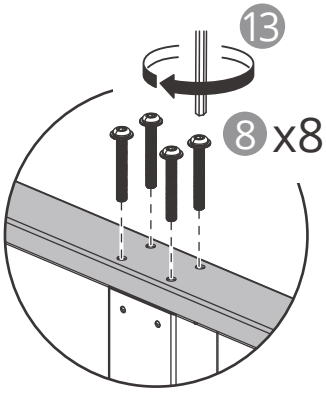
13
8 x8

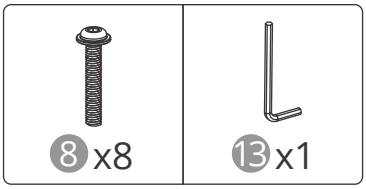
8 x8
13 x1

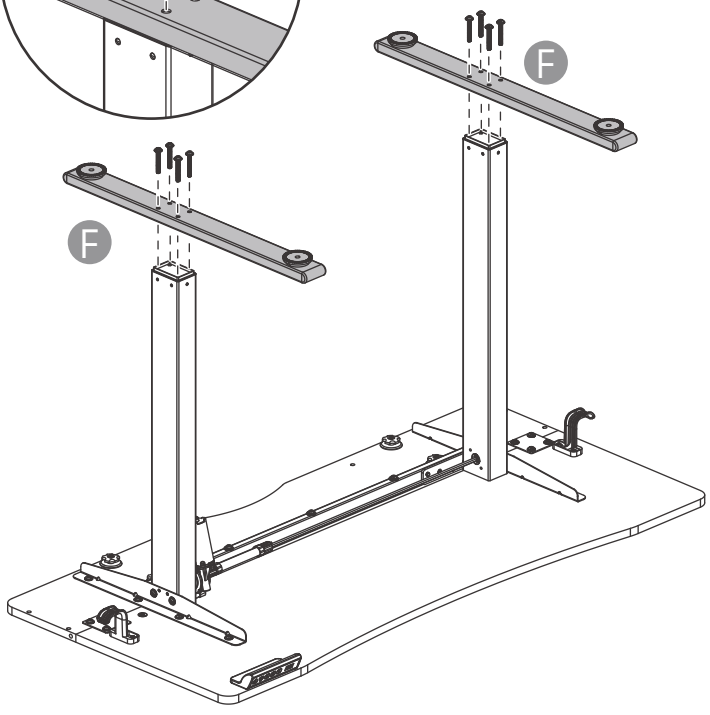
F
F

18

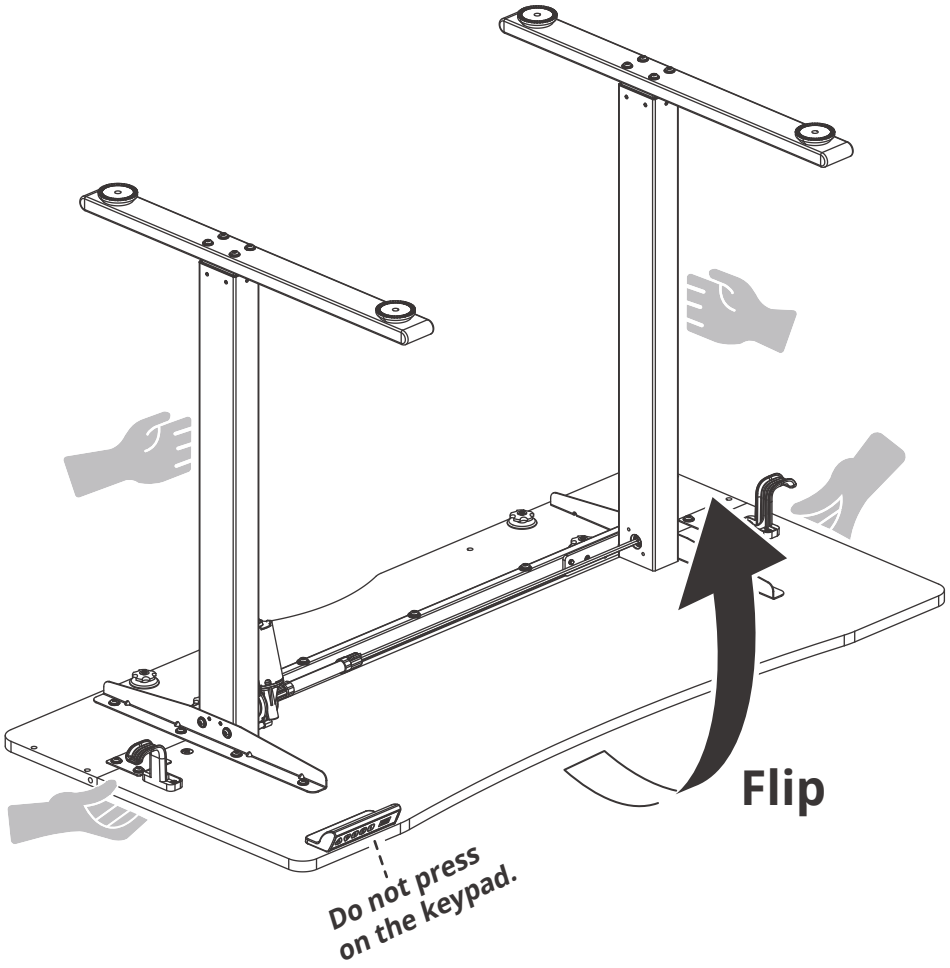

19

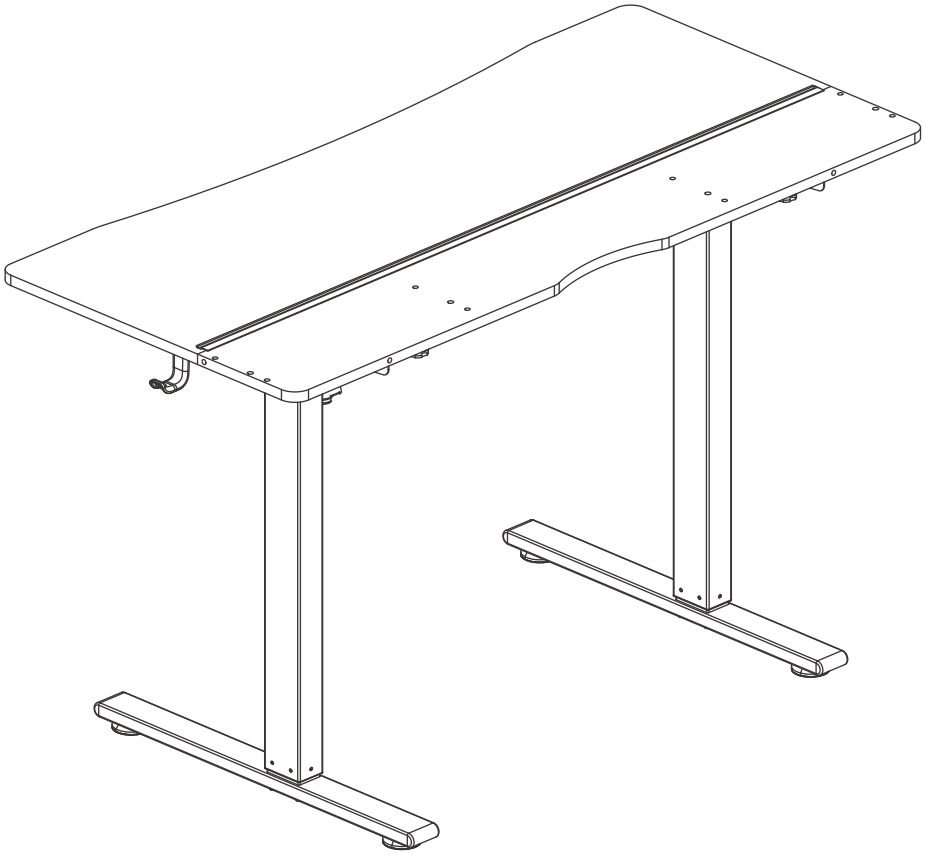

20

Note: Please place the desktop **on the carpet** for installation to prevent scratching the desktop.

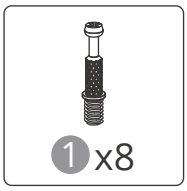

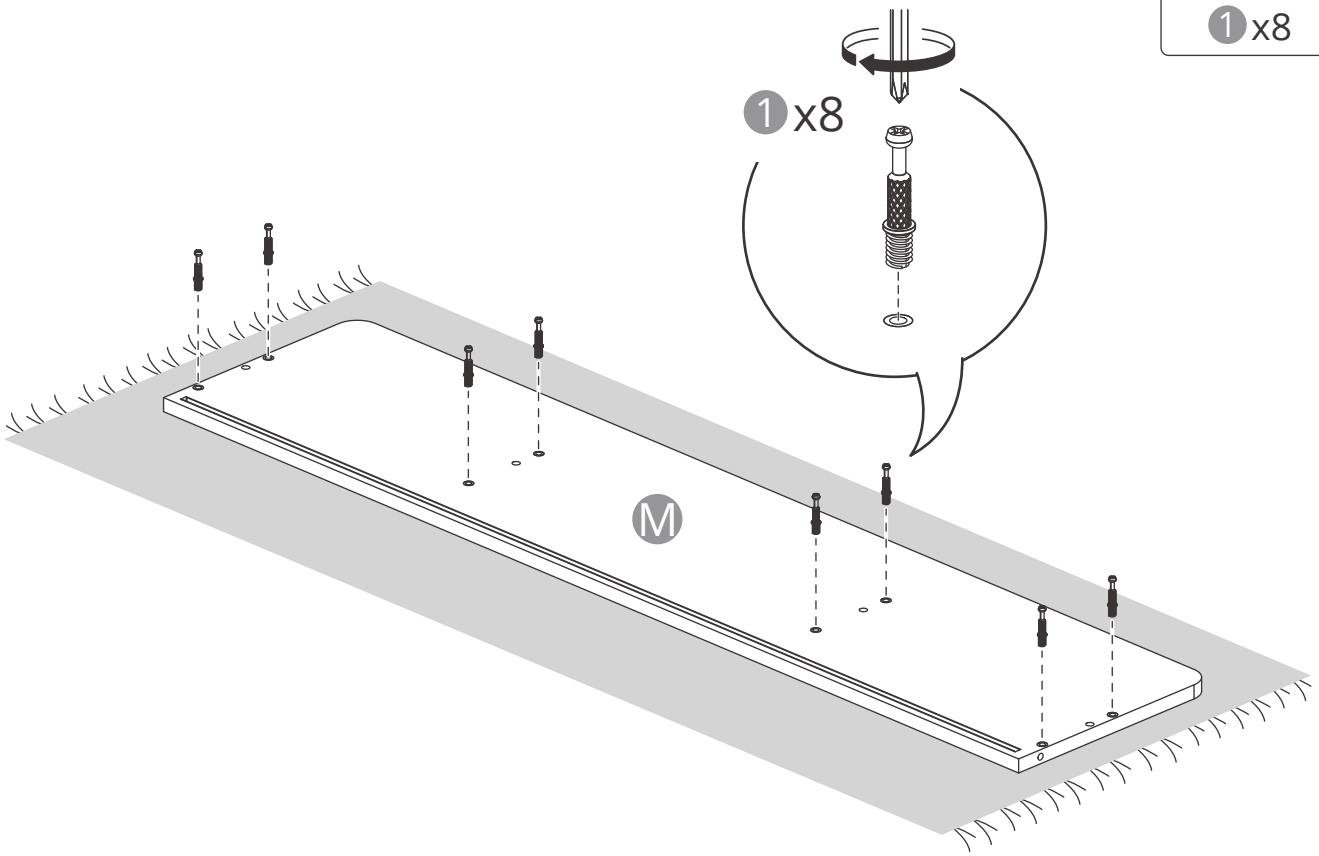

21

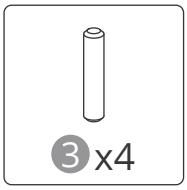

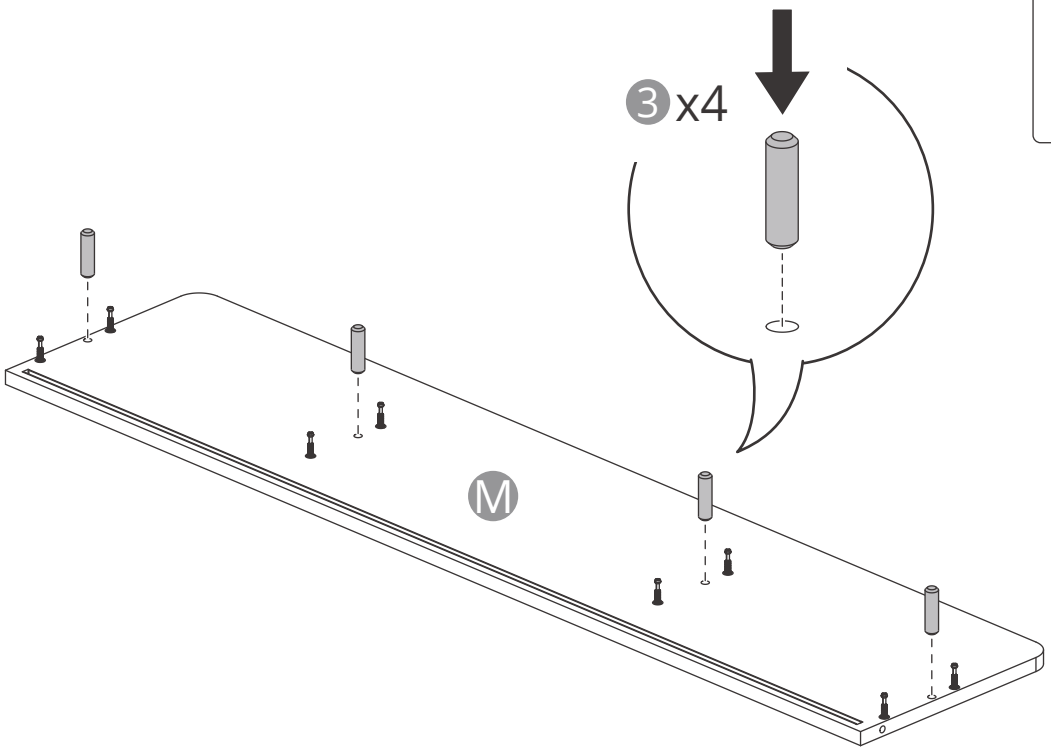

22

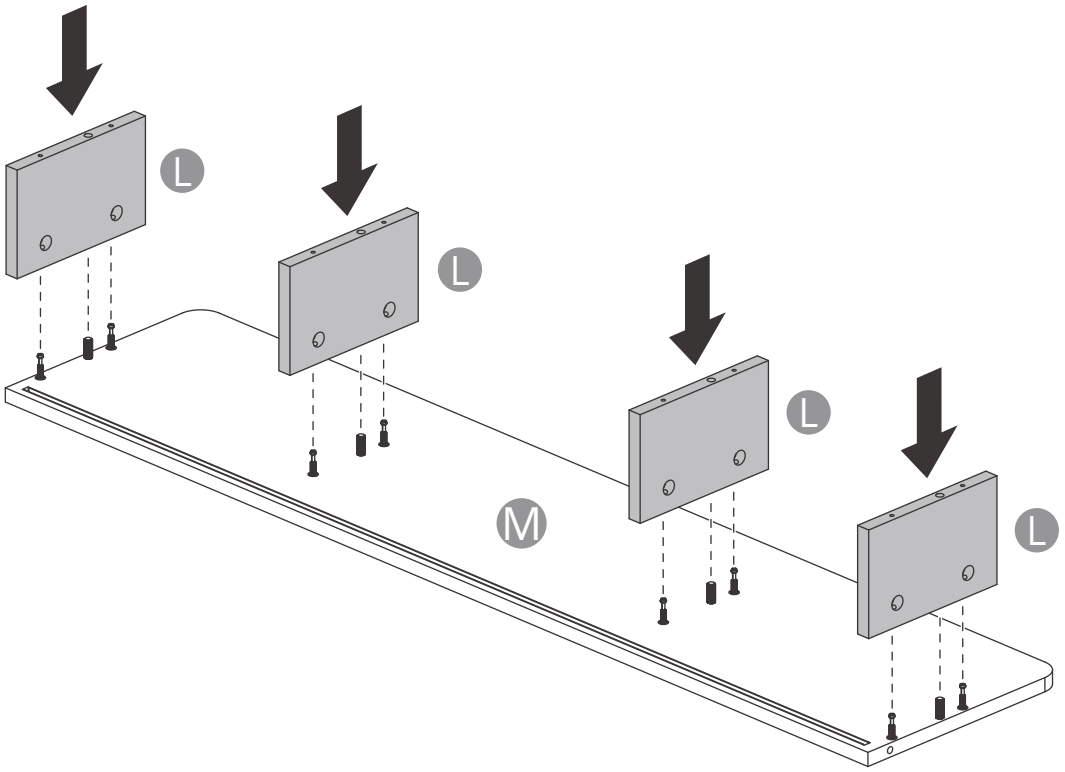

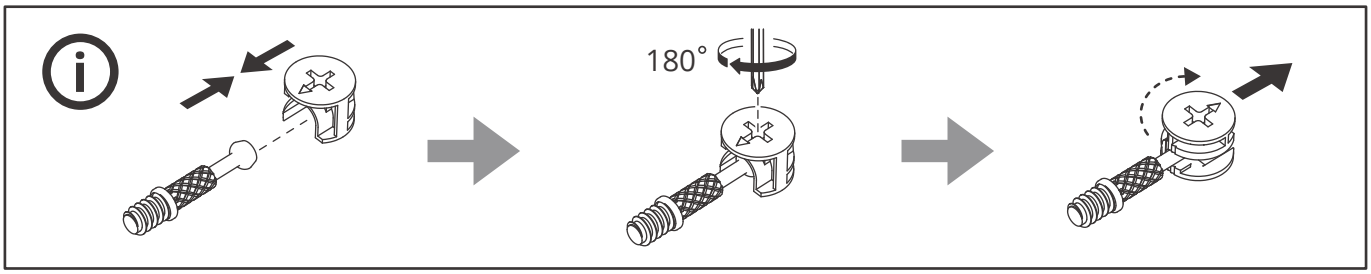

23

The recommended screw torque for locking the desktop is **6-8 N·m**; please keep the screws perpendicular to the mounting surface during installation. This will result in a flatter desktop.

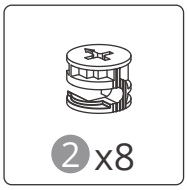

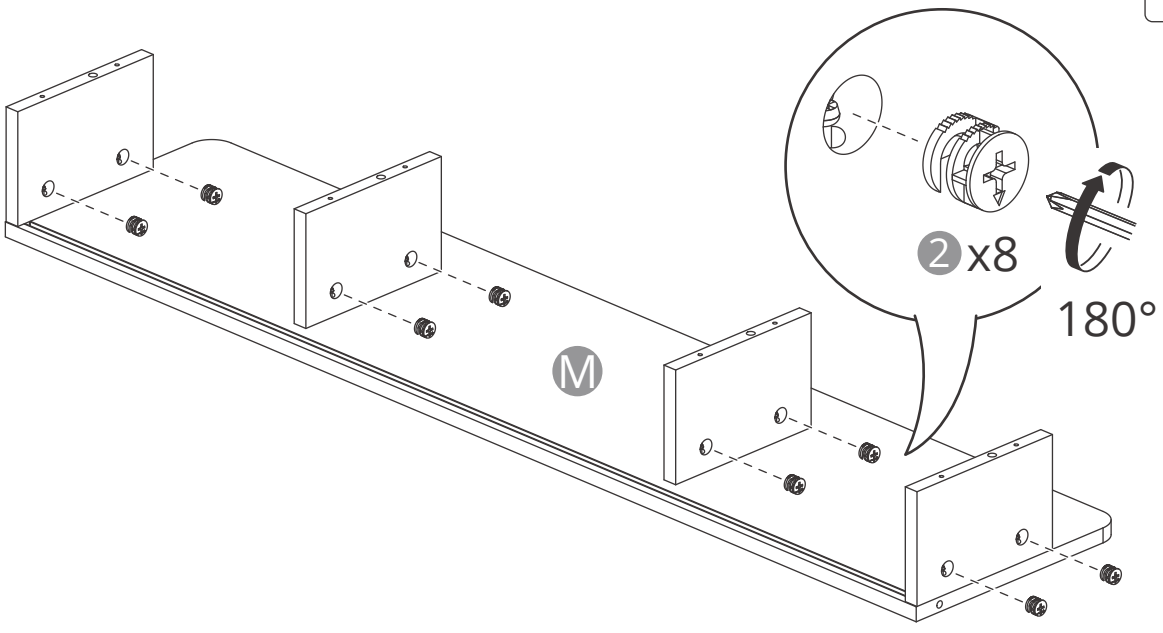

24

Connect to the power supply.

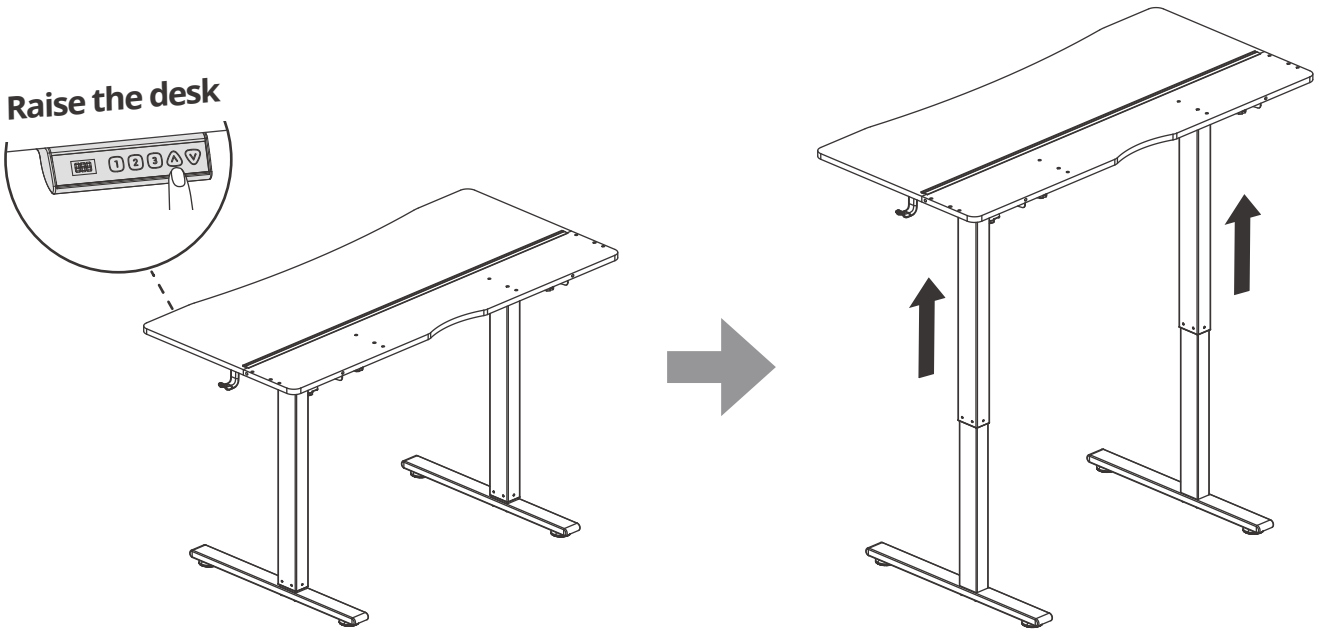

25

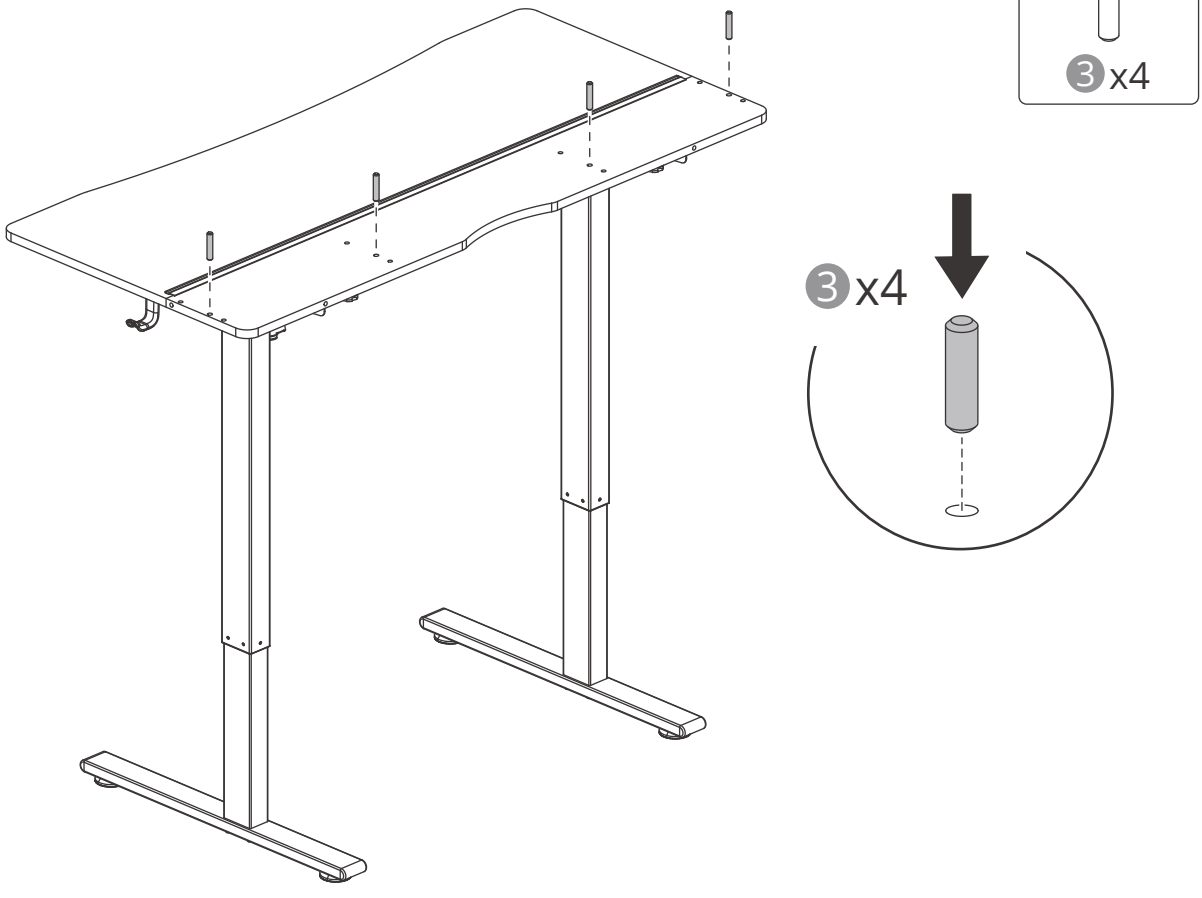

26

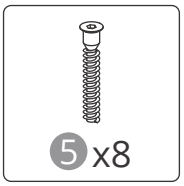



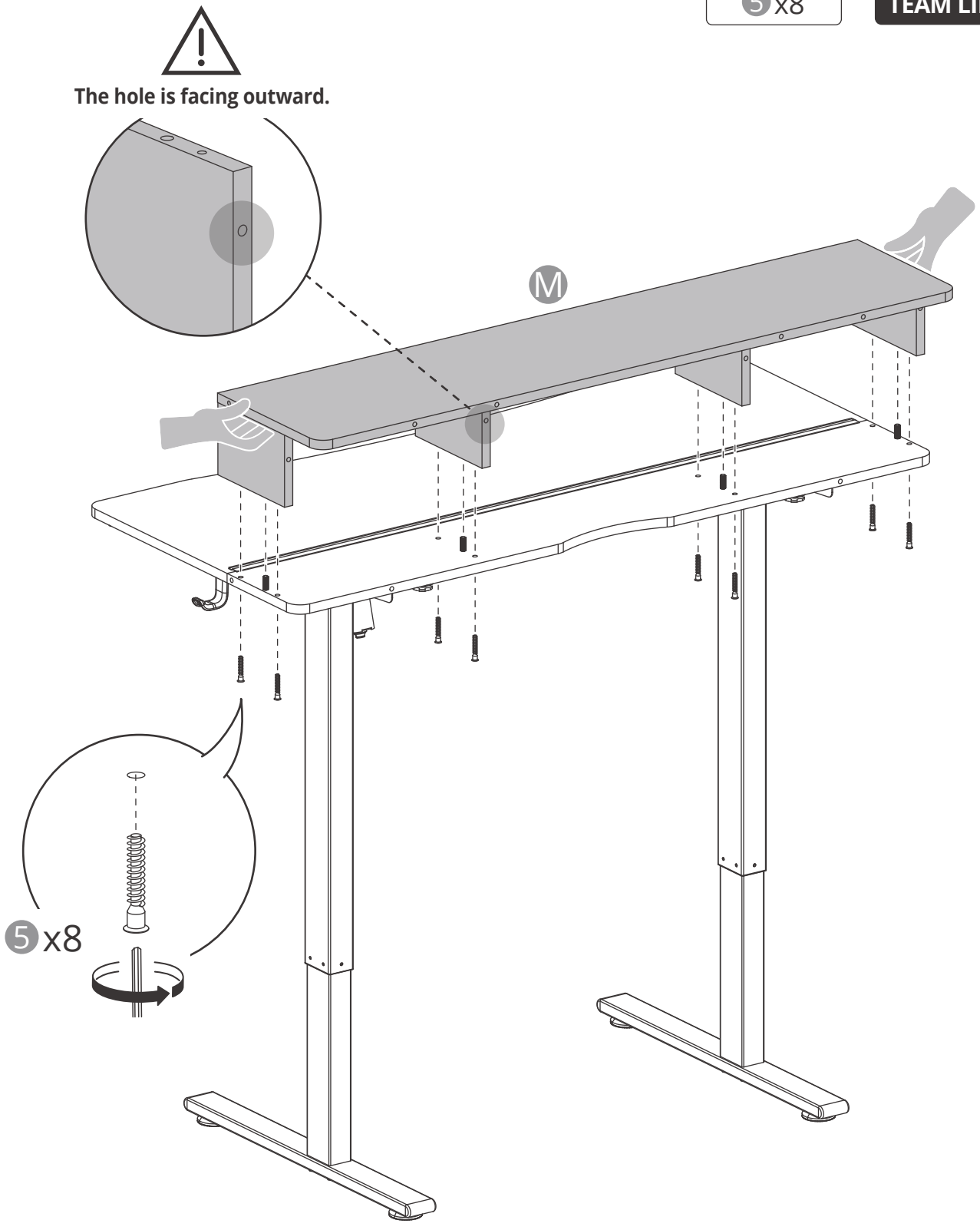

27

Please align the holes first,then insert it firmly with your hand or use your own hammer to drive it in.

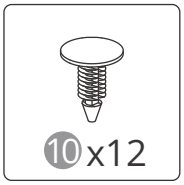

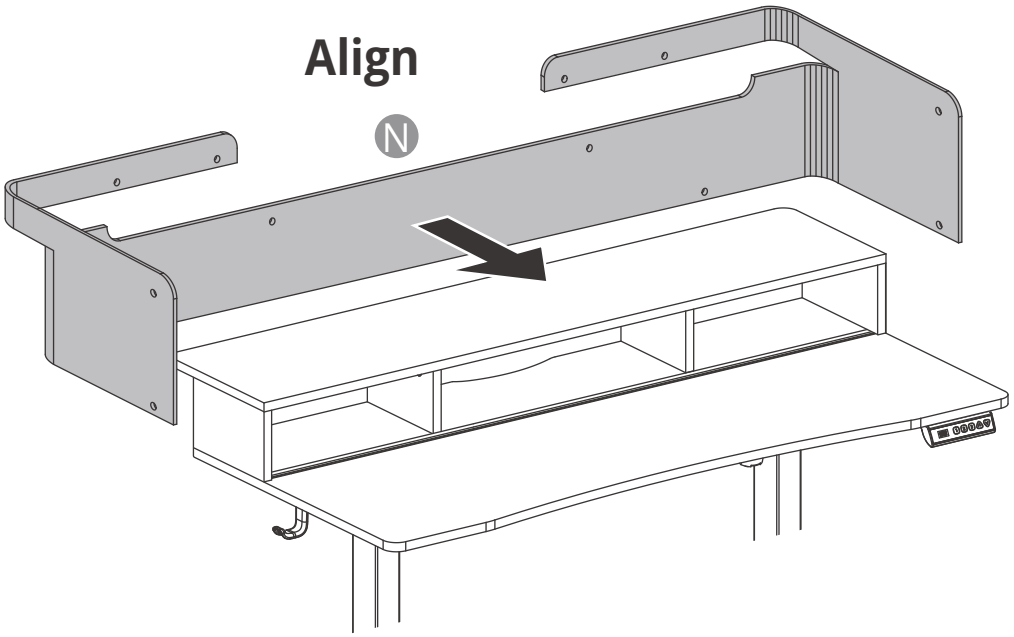



NOTE: Ensure the grooved side of the felt panel faces inwards.

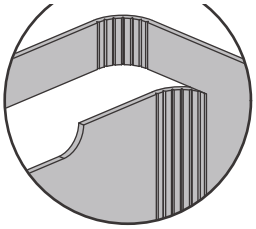

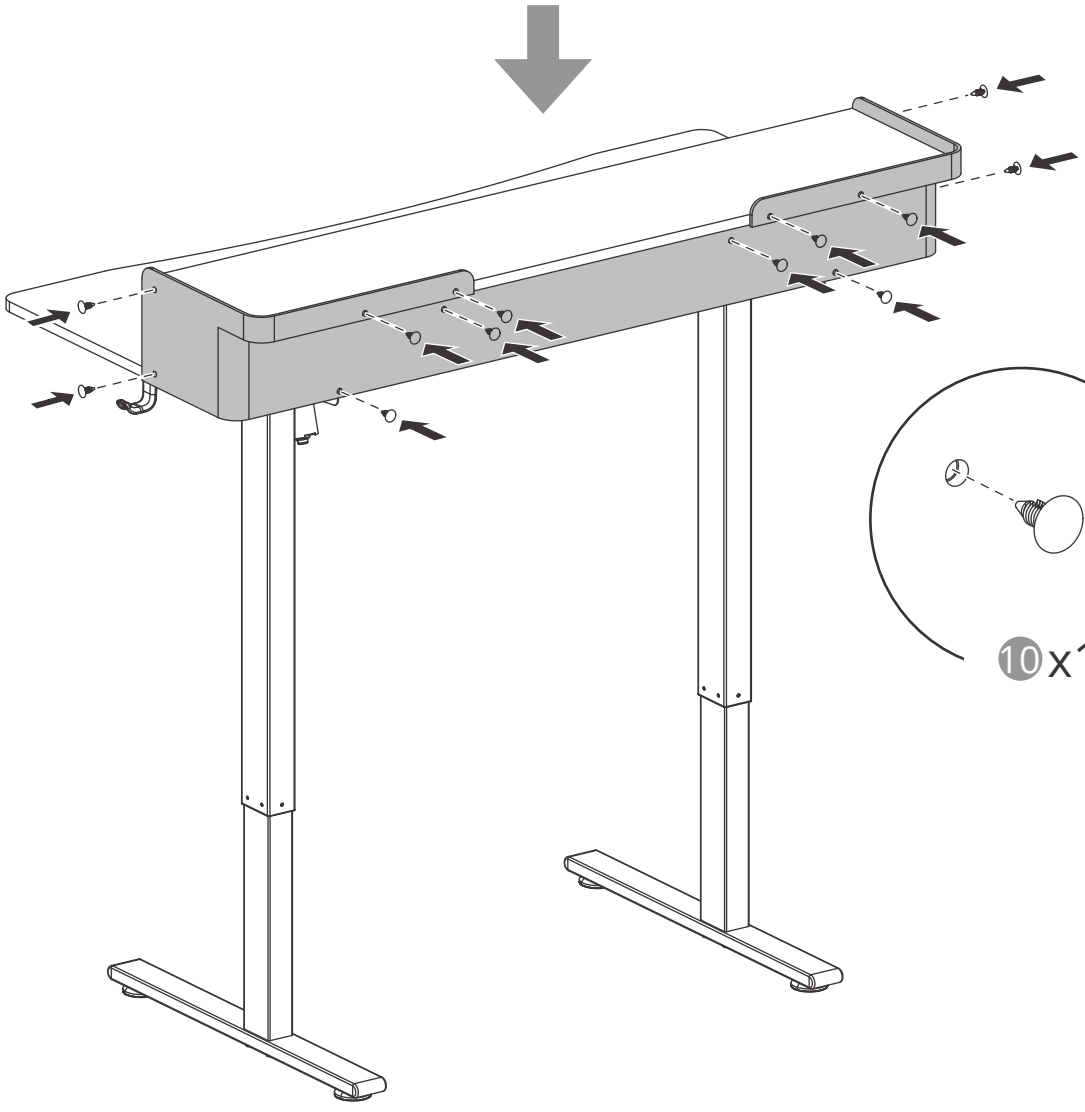

28

Keep the velvet-lined edge facing upwards.

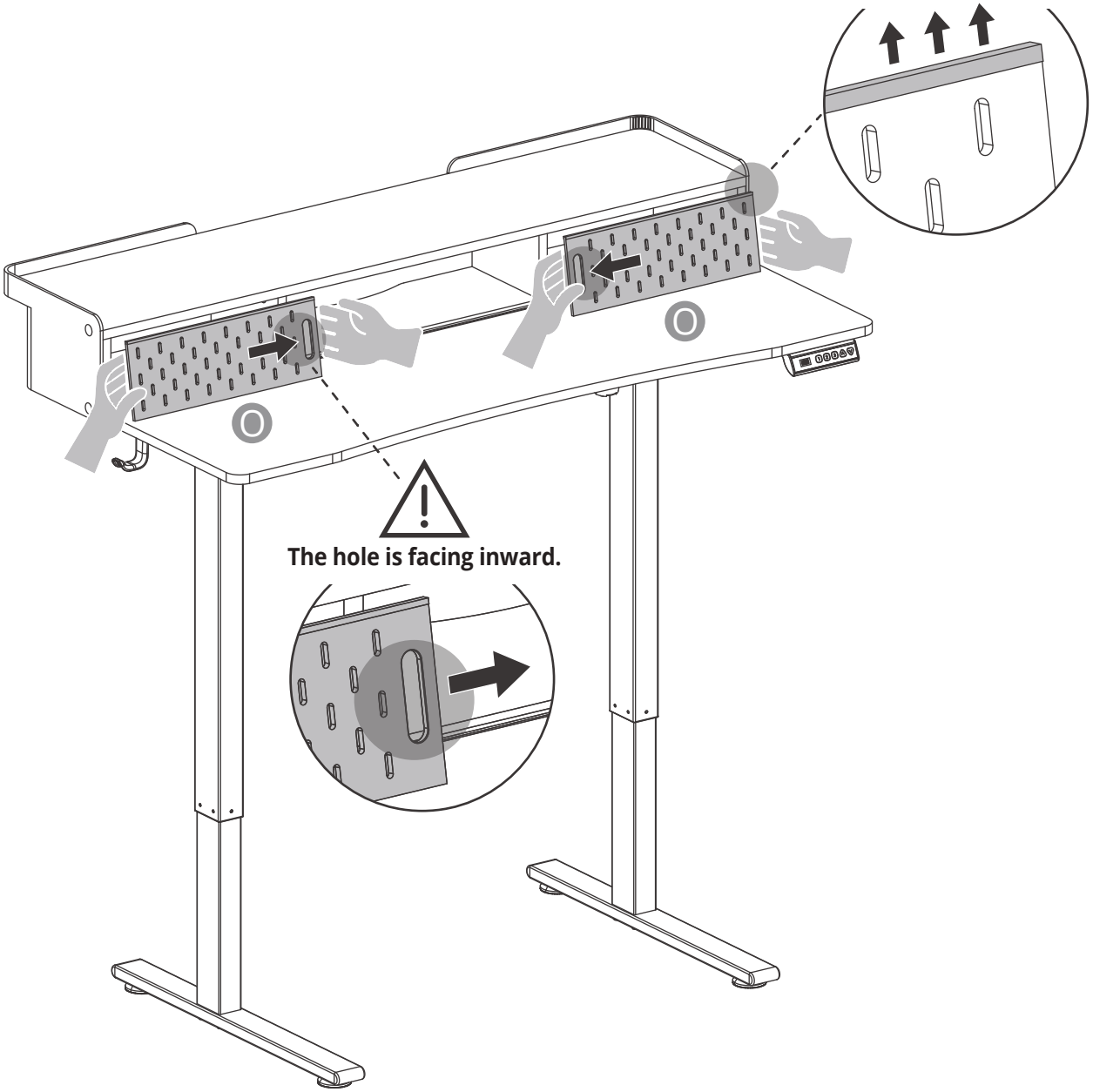

The hole is facing inward.

1 Angled Insertion

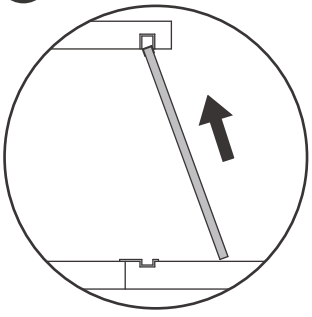

2 Vertical Seating

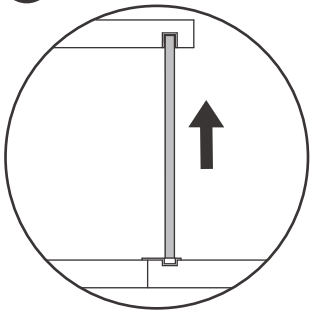

3 Bottom Alignment

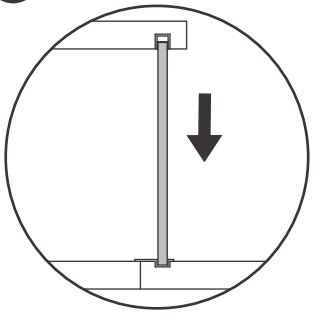

29

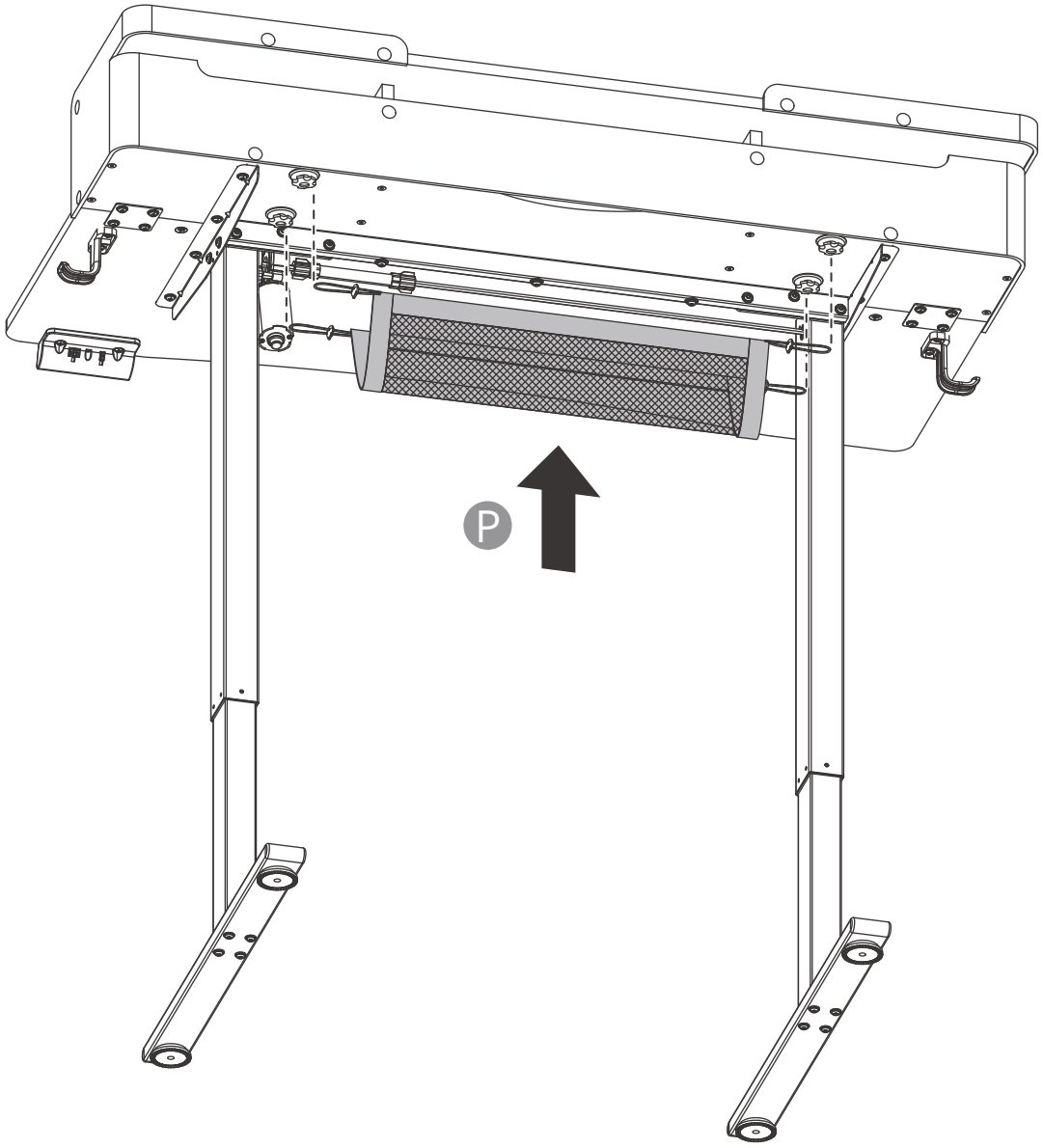

1 **Pull the lanyard**

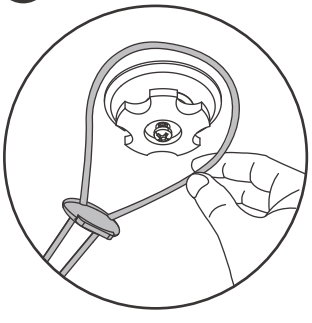

2 **Tighten the lanyard**

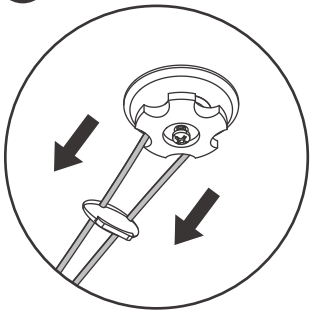

3 **Secure near the knob**

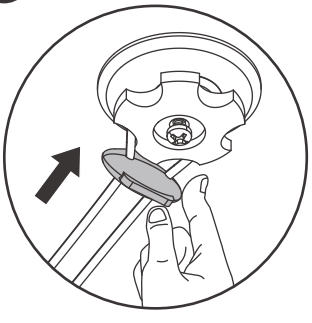

30

Bundling the cables and placing them in the **mesh bag** allows for better cable organization.

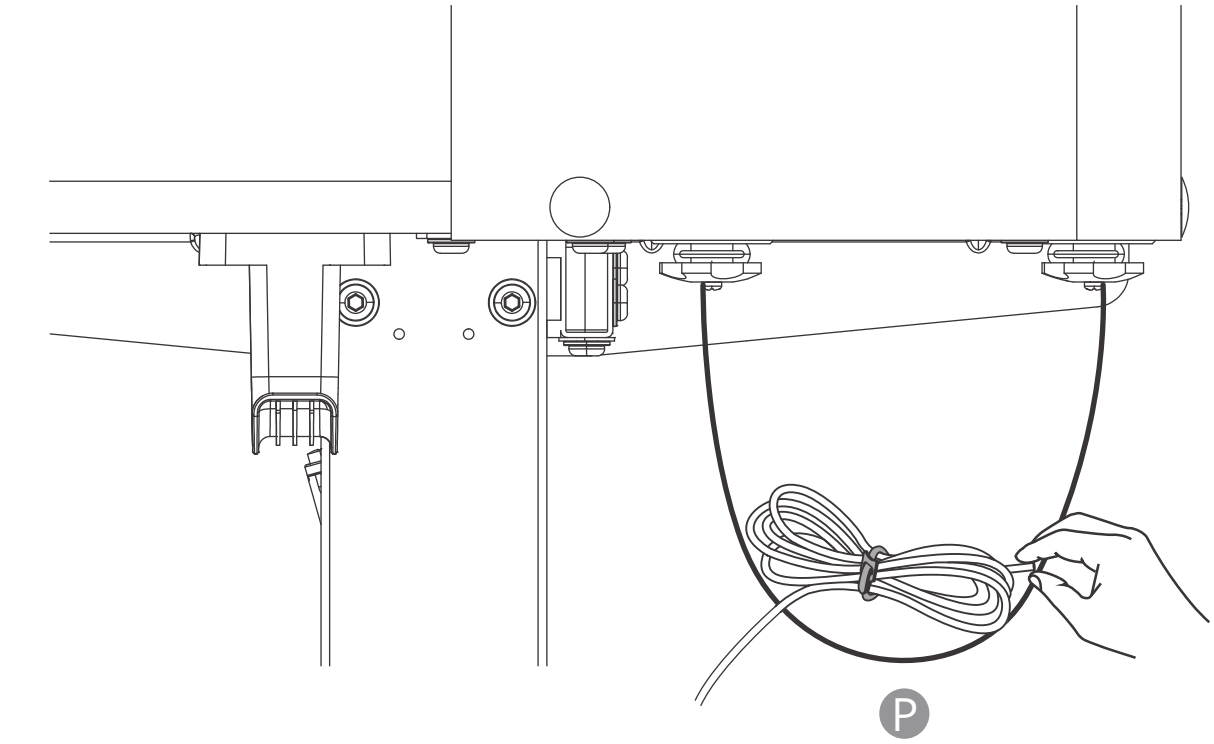

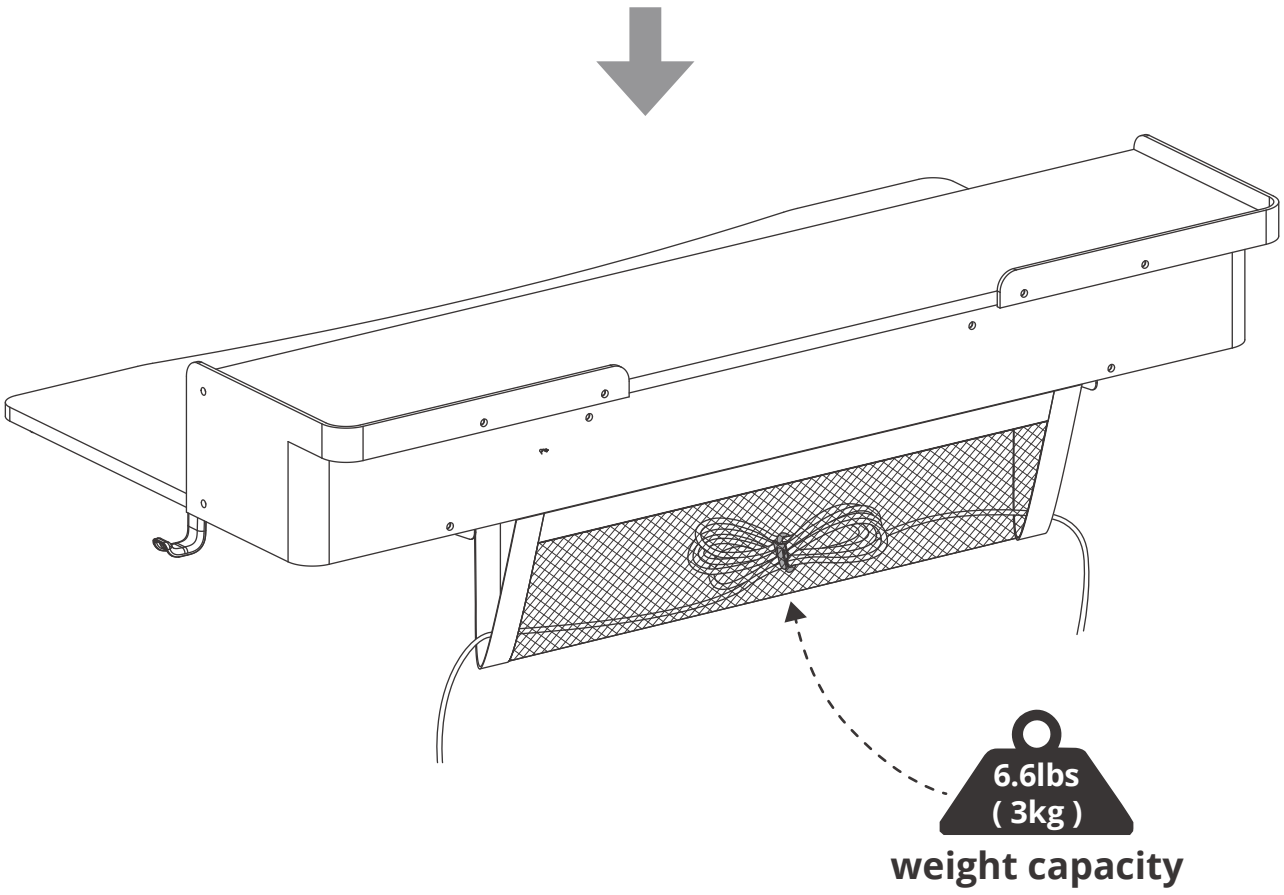

31

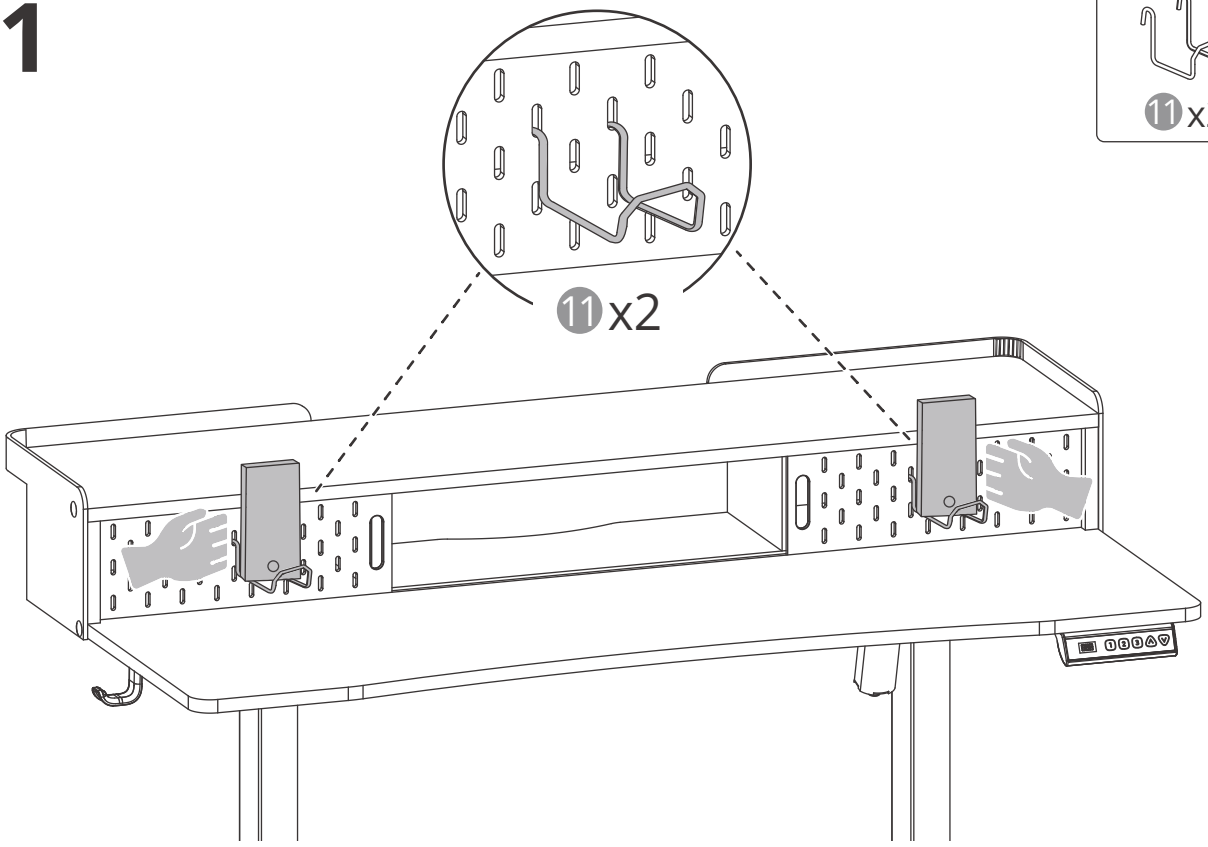

32

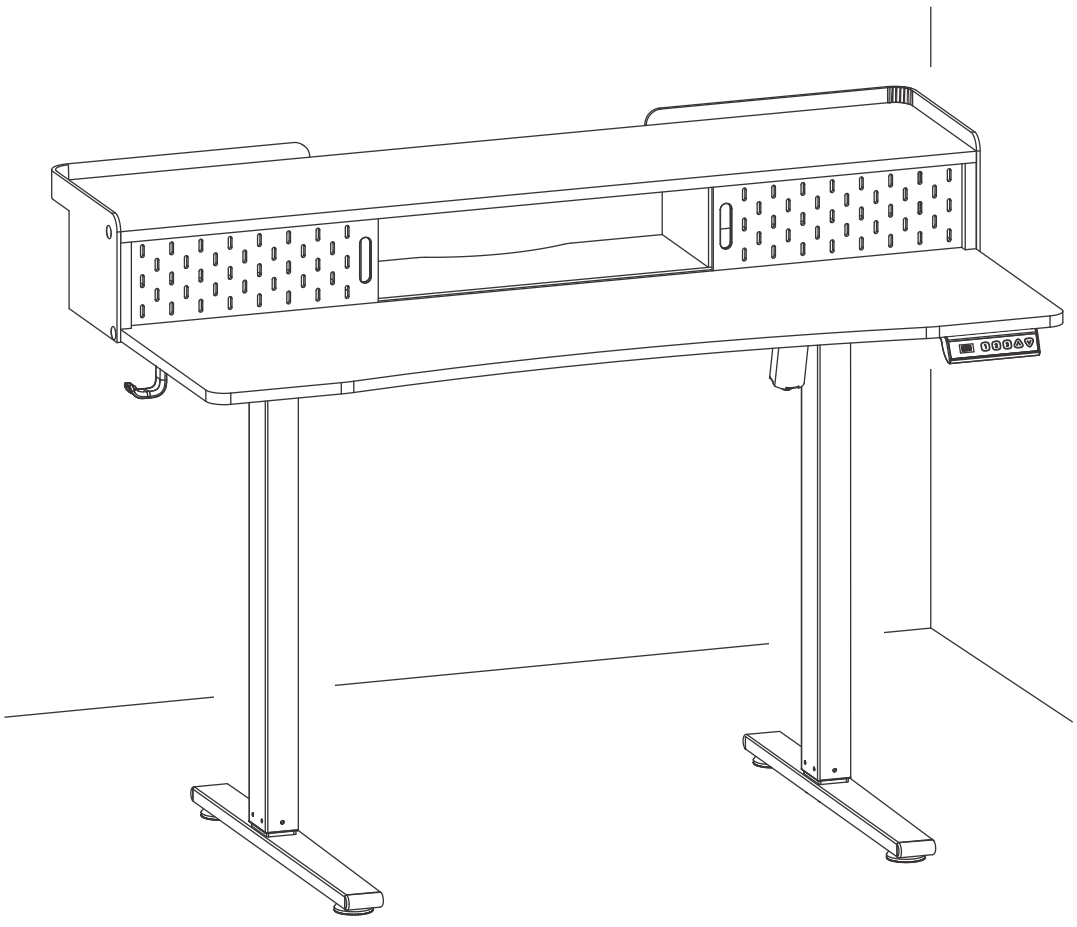

Keypad Functions and Operations



Setting and Recalling Memory Presets

This feature allows you to save specific desk heights for quick, one-touch access.

To Save a Memory Preset:

1. Adjust the desk to your desired height.
2. Press and hold the **1** button for three seconds. The display will show S-1 to confirm the current height has been saved to preset **1** .
3. Follow the same steps for the **2** and **3** buttons to save other presets.

To Recall a Memory Preset:

Briefly press the **1** , **2** , or **3** button. The desk will automatically adjust to the corresponding saved height.



Collision Protection

This feature detects obstacles when the desk is in motion to reduce the risk of damage or injury. The desk will stop and reverse slightly if a collision occurs.

To adjust the sensitivity:

Press and hold the **1** and **2** buttons together for 2 seconds. You can cycle through four sensitivity levels: **Off**, **L** (Low), **N** (Normal), and **H** (High).



Child Lock

This function locks the keypad to prevent unintended operation.

- To Activate: Press and hold the **1** and **3** buttons simultaneously for 5 seconds. The display will show LOC , and the keypad will be locked.

- To Deactivate: Press and hold the **1** and **3** buttons again for 5 seconds. The display will return to showing the current height.



System Reset

A reset may be required if the display shows an error code (e.g., Er1 , E20) or if the desk is unresponsive.

1. Press and hold the V button for at least 3 seconds.
2. Release the button when the display shows rST .
3. The desk will automatically lower to its lowest position and then rise slightly.
4. The reset is complete when the display shows the minimum height.

Error Codes and Troubleshooting	
Handset displays "E02"	**Collision Protection** This error appears if the desk experiences significant vibration, collides with an object, or becomes tilted during movement. The desk will stop and reverse automatically. **Solutions** 1. The error should clear automatically. You can also press any button during the reversal to stop and clear the code. Before using the desk again, CHECK for and REMOVE any obstacles. ENSURE the desk is on a level surface. 2. If the problem persists, please take a video of the issue and contact after-sales support at support@yfs.life.
Handset displays "Hot"	**Overheat Protection** This error can be triggered by continuous, prolonged operation of the motor. **Solutions** 1. STOP using the desk and let it cool down for at least 18 minutes before resuming operation. 2. If the problem persists, please take a video of the issue and contact after-sales support at support@yfs.life.
Handset displays "Er1"	**Motor Error** A motor connection issue has been detected. **Solutions** 1. DISCONNECT the desk from the power outlet. 2. CHECK that all motor cables are securely connected to the control box. 3. RECONNECT the power cord. 4. PERFORM a System Reset. 5. If the problem persists, please take a video of the issue and contact after-sales support at support@yfs.life.
Handset displays "E20"	**Overload Protection** The weight on the desktop exceeds the maximum load capacity. **Solutions** 1. REMOVE some weight from the desktop. If the error appeared while the desk was moving down, you may also need to disconnect and then reconnect the power after removing the excess weight. 2. If the problem persists, please take a video of the issue and contact after-sales support at support@yfs.life.

Handset displays "E31"	**Undervoltage Protection** The input voltage from the power source is too low. **Solutions** 1. DISCONNECT the desk from the power outlet. 2. CHECK that the power cord is securely connected to both the wall outlet and the control box. 3. RECONNECT to a stable power source. 4. If the problem persists, please take a video of the issue and contact after-sales support at support@yfs.life.
Handset displays "E32"	**Overvoltage Protection** The input voltage from the power source is too high. **Solutions** 1. DISCONNECT the desk from the power outlet. 2. CHECK that your power source is compatible with the desk's electrical requirements. 3. RECONNECT to a proper power source. 4. If the problem persists, please take a video of the issue and contact after-sales support at support@yfs.life.

Looking for help?

We’re Here For You!



support @yfs.life

For assembly assistance,You can send us emails.