ASSEMBLY INSTRUCTIONS

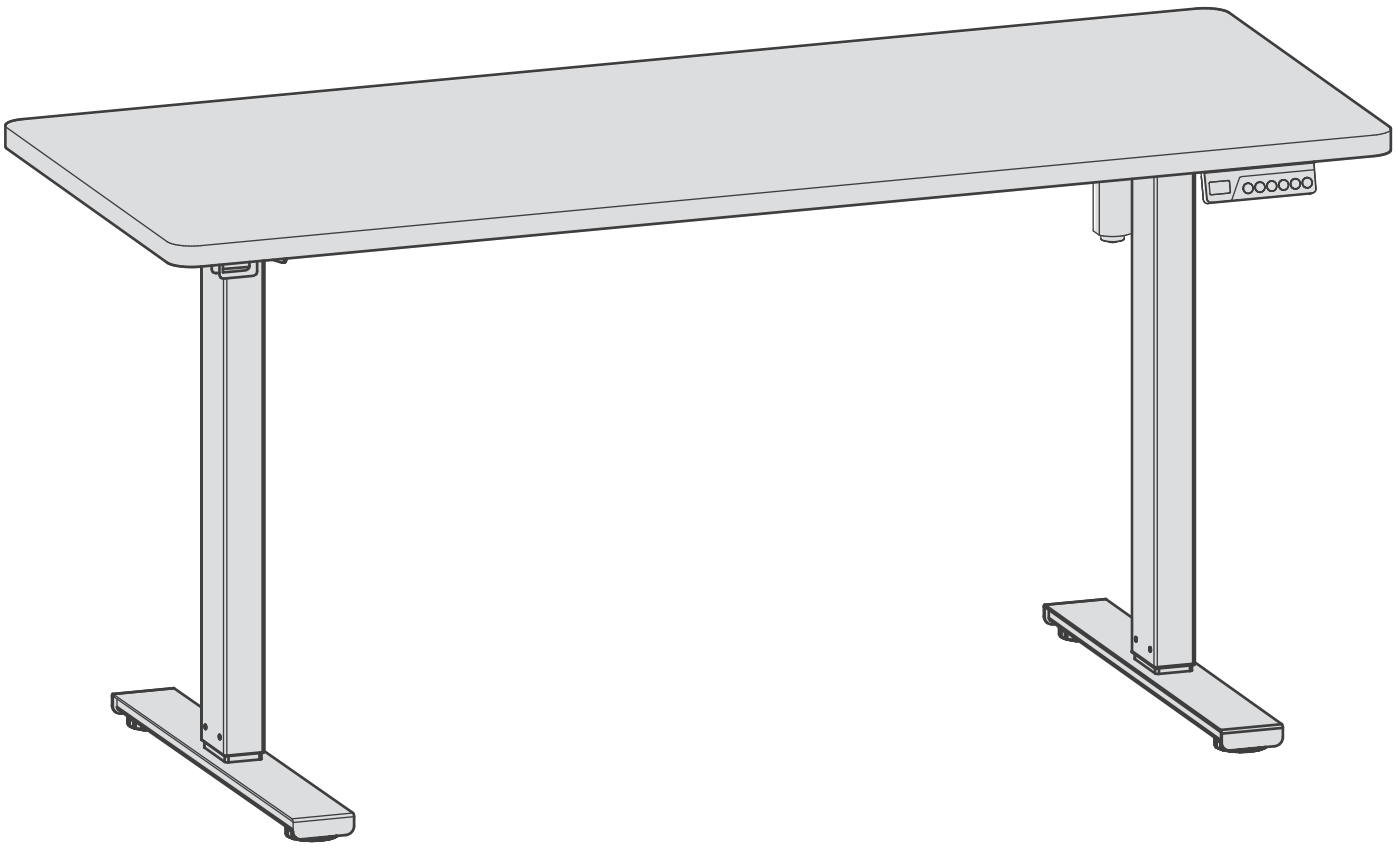

Scan QR code for installation video

support@yfs.life

yfs.life/SDE0148-R-LS3C

Caution

- Keep children and animals away from the desk during use. Ensure the desktop is not touching any walls.
- Remove obstacles taller than 20"/51cm from underneath the desk.
- Operate only in a working environment temperature of 32°F-104°F/0°C-40°C.
- Keep product away from corrosive gases, liquids and dusty objects.
- Keep hands, feet and other body parts in a safe position during operation. Anti-collision is not automatically enabled during all resets.
- The company does not bear any warranty or liability for damage and human injury caused by any abnormal or un-intended operation of the equipment.
- It is necessary to perform a manual reset after the initial installation or power cycling the equipment.

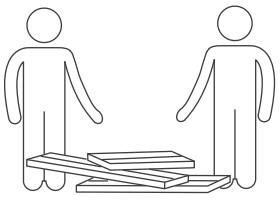	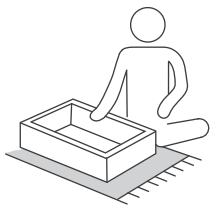	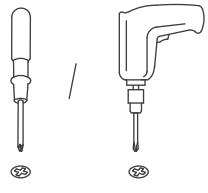	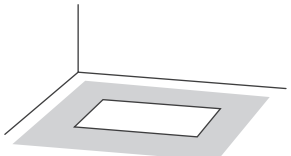
Complete through collaboration.	Assemble on a clean, flat, and protective surface.	Phillips screwdriver or drill required (not provided).	Allow an assembly area at least twice the desktop size.

PARTS LIST

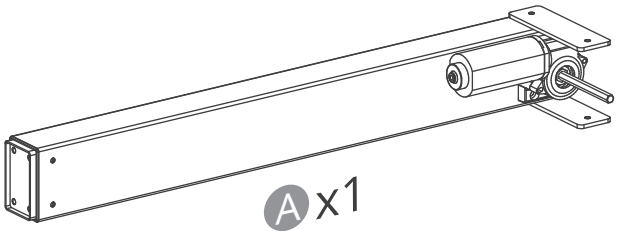

A x1

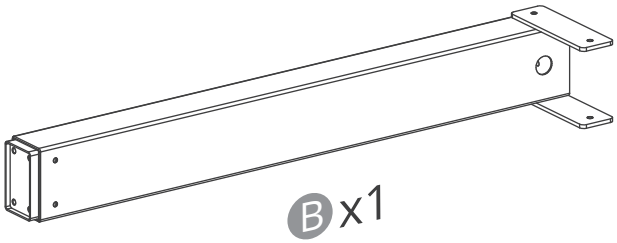

B x1

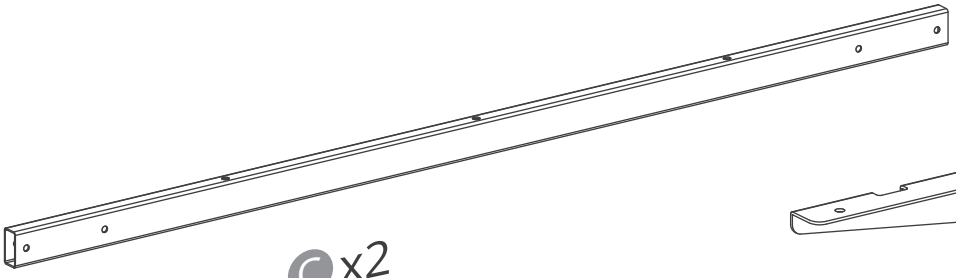

C x2

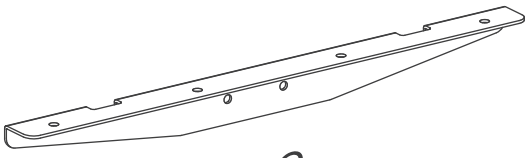

E x2

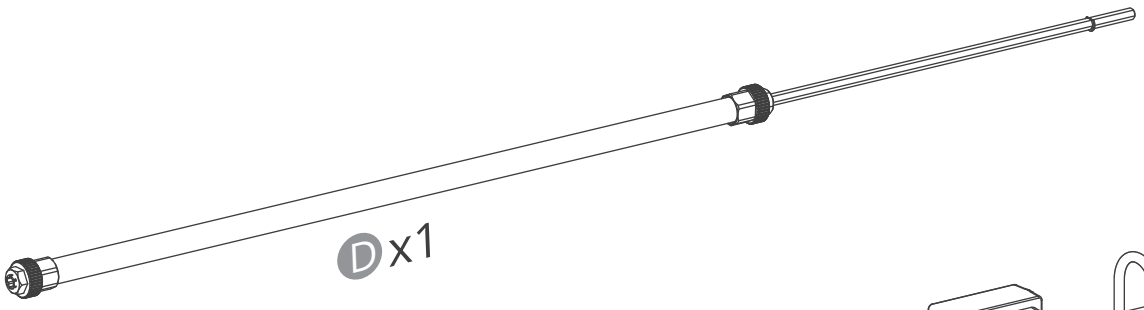

D x1

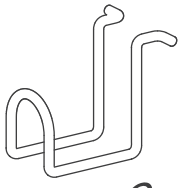

J x2

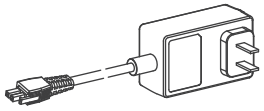

I x1

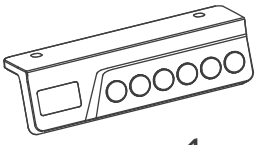

G x1

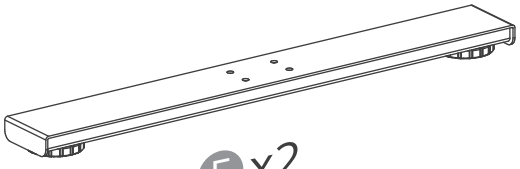

F x2

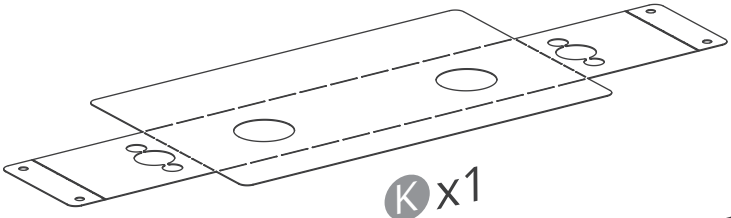

K x1

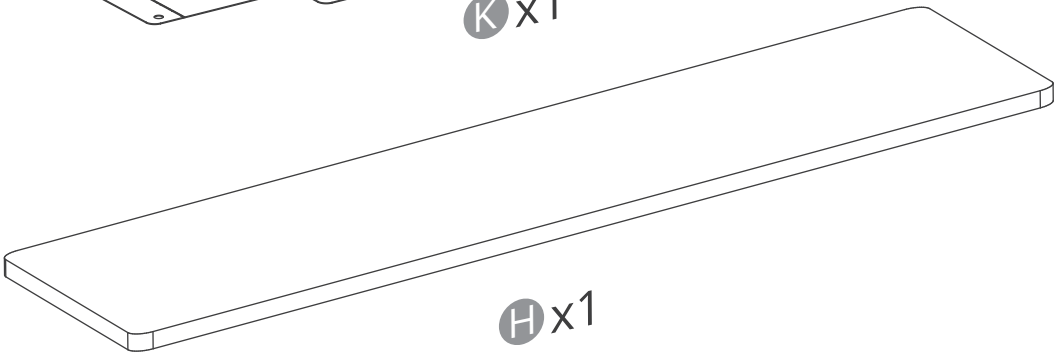

H x1

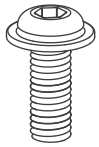

1 x12
M6X16

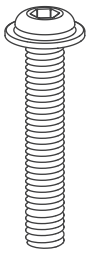

2 x8
M6X28

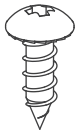

3 x20
ST5x14

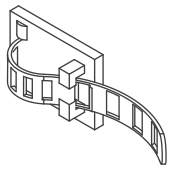

4 x2

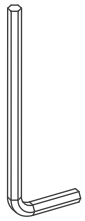

5 x1
5mm



6 x1
19mm

EXPLODED VIEW DIAGRAM

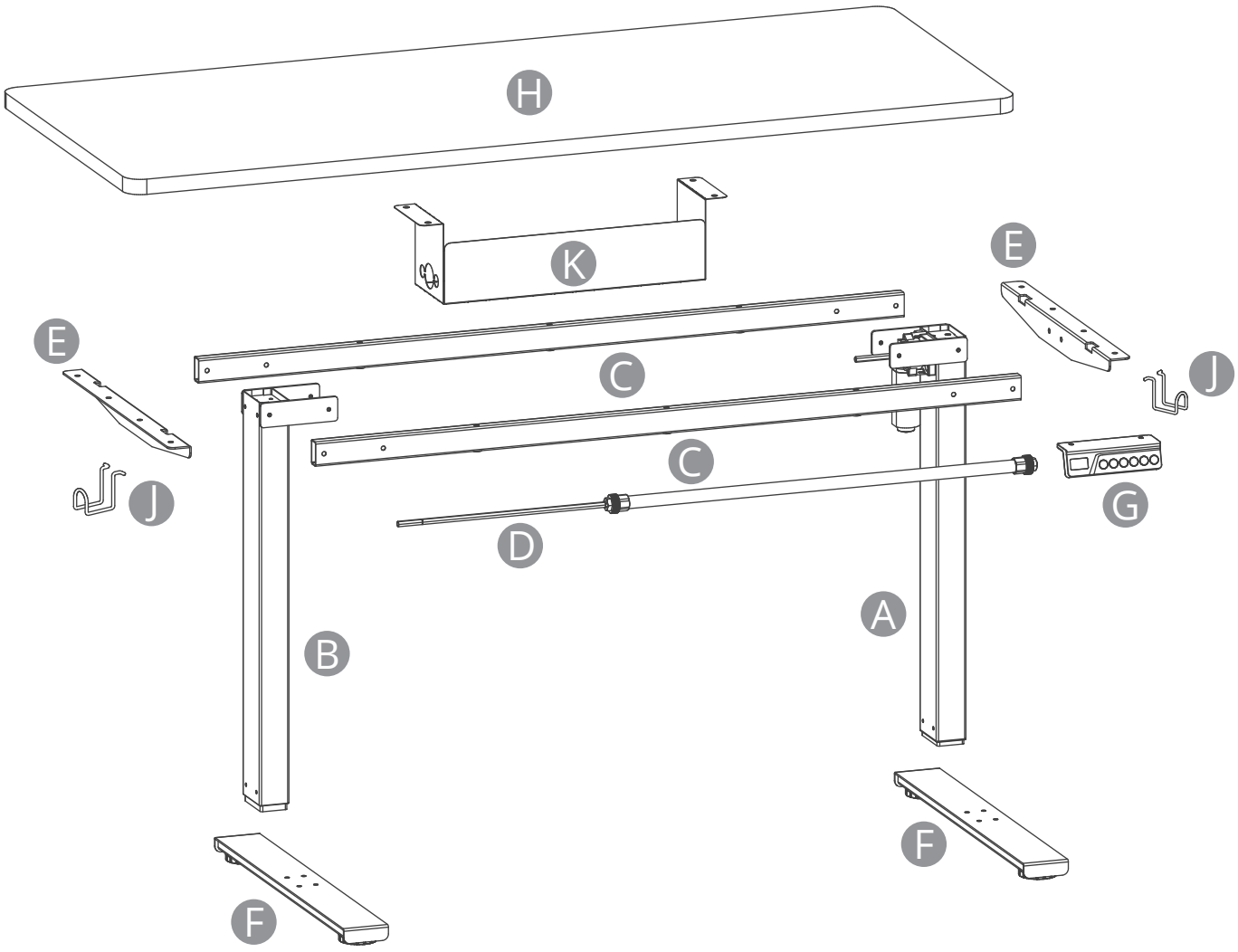

1 **Note**: To prevent scratching the finish, assemble and fold the metal drawer on a soft, clean surface, such as a carpet or blanket.

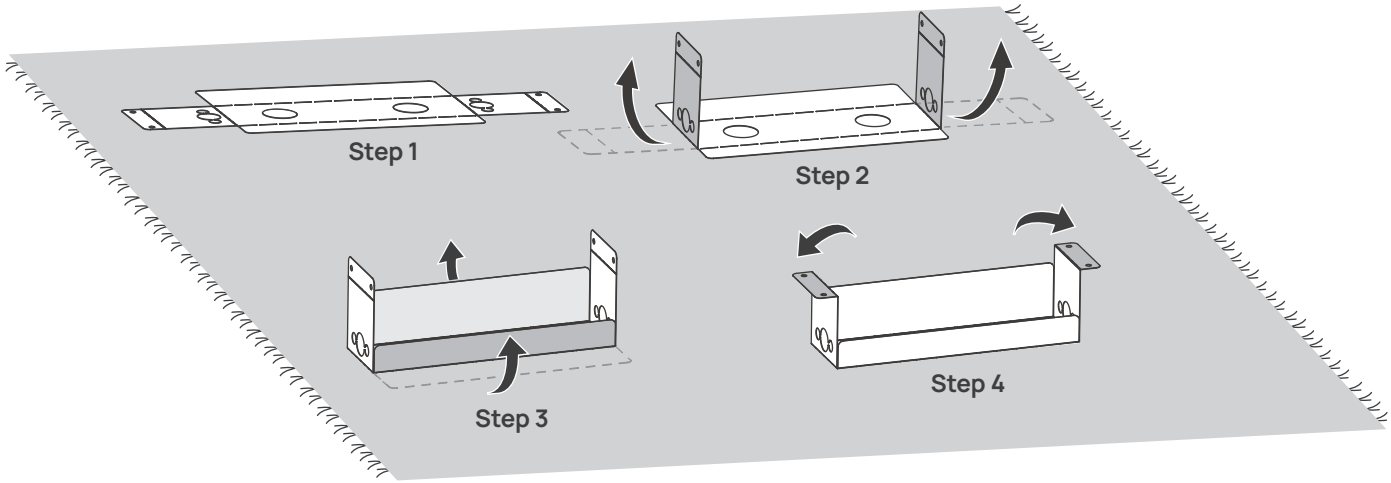

2

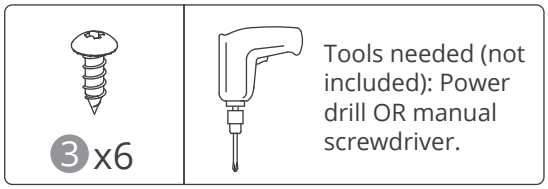

Tools needed (not included): Power drill OR manual screwdriver.

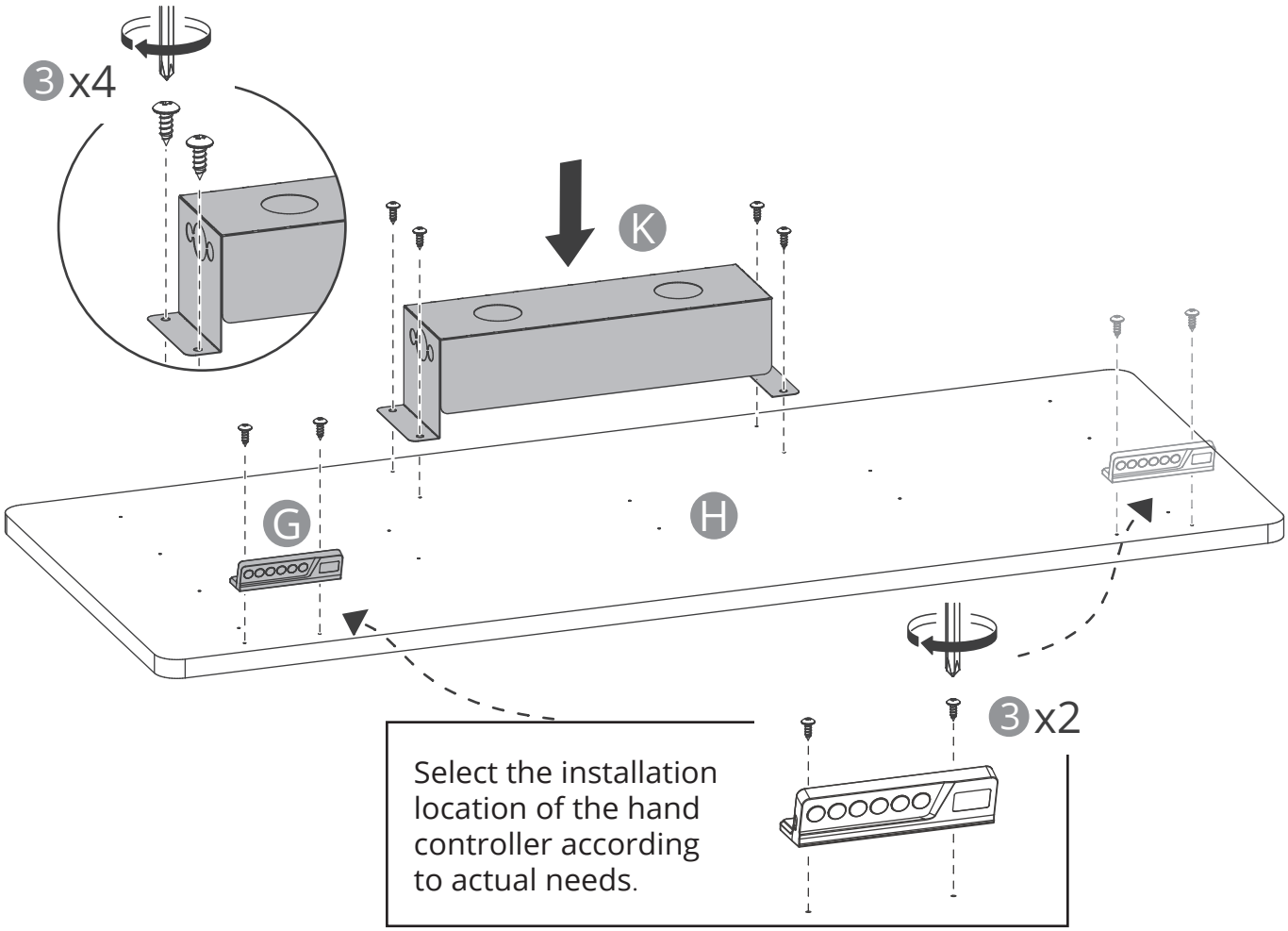

Select the installation location of the hand controller according to actual needs.

3

Tighten all screws on the desk frame securely to ensure the desk's stability.

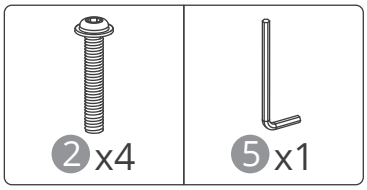

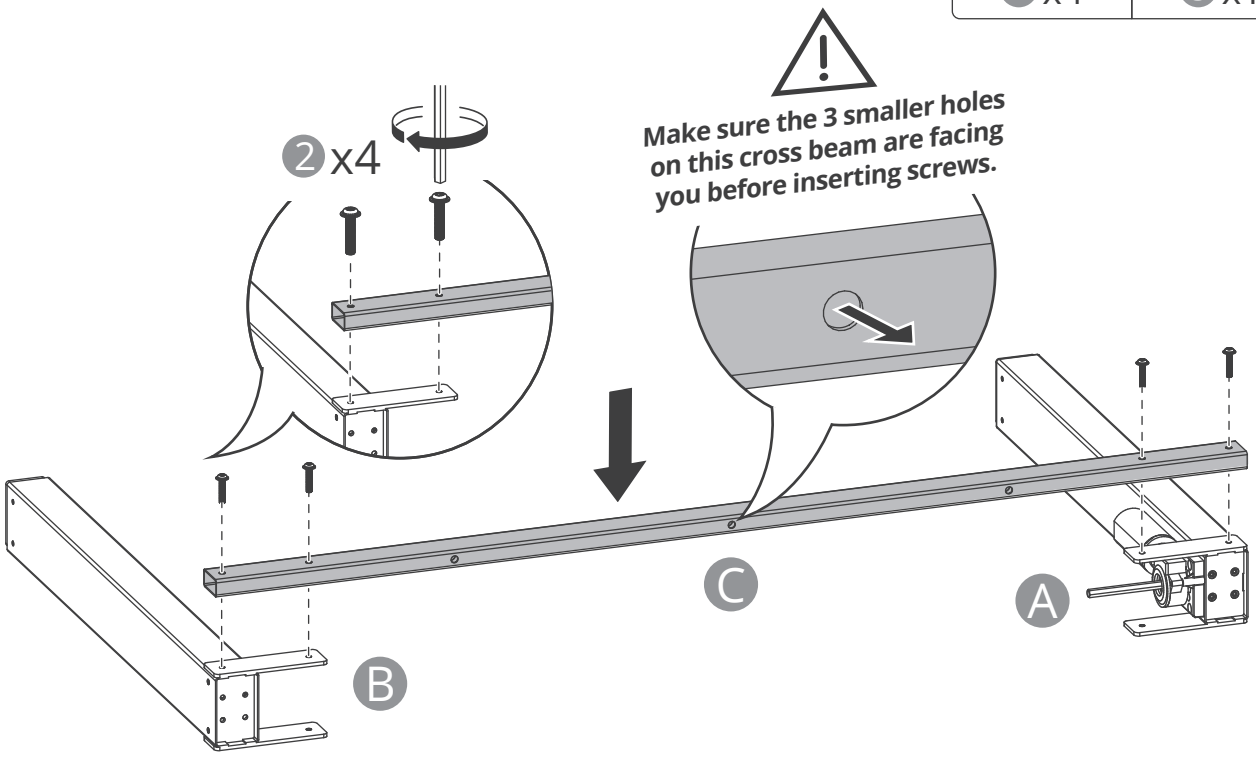

4

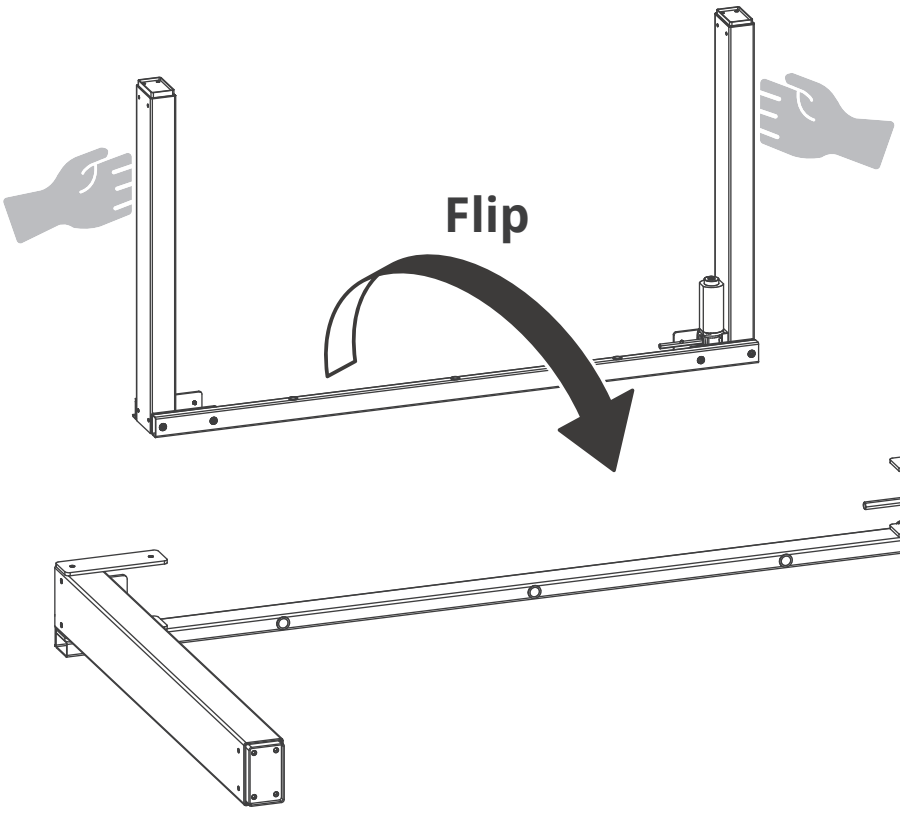

TEAM LIFT

We recommend two people assist with flipping to prevent crossbar deformation.

5

Carefully flip the desk frame over, then secure the second cross beam using screws.

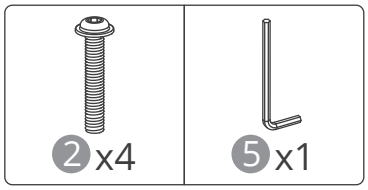

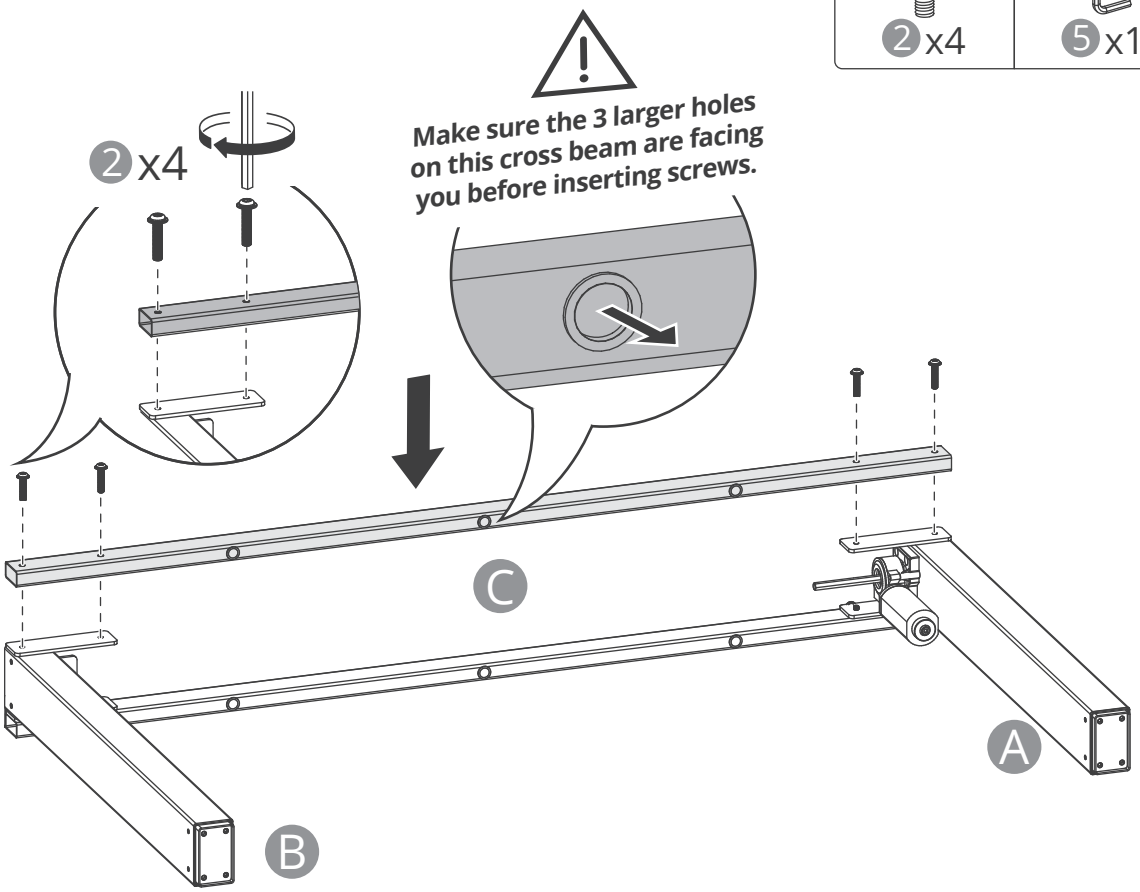

6

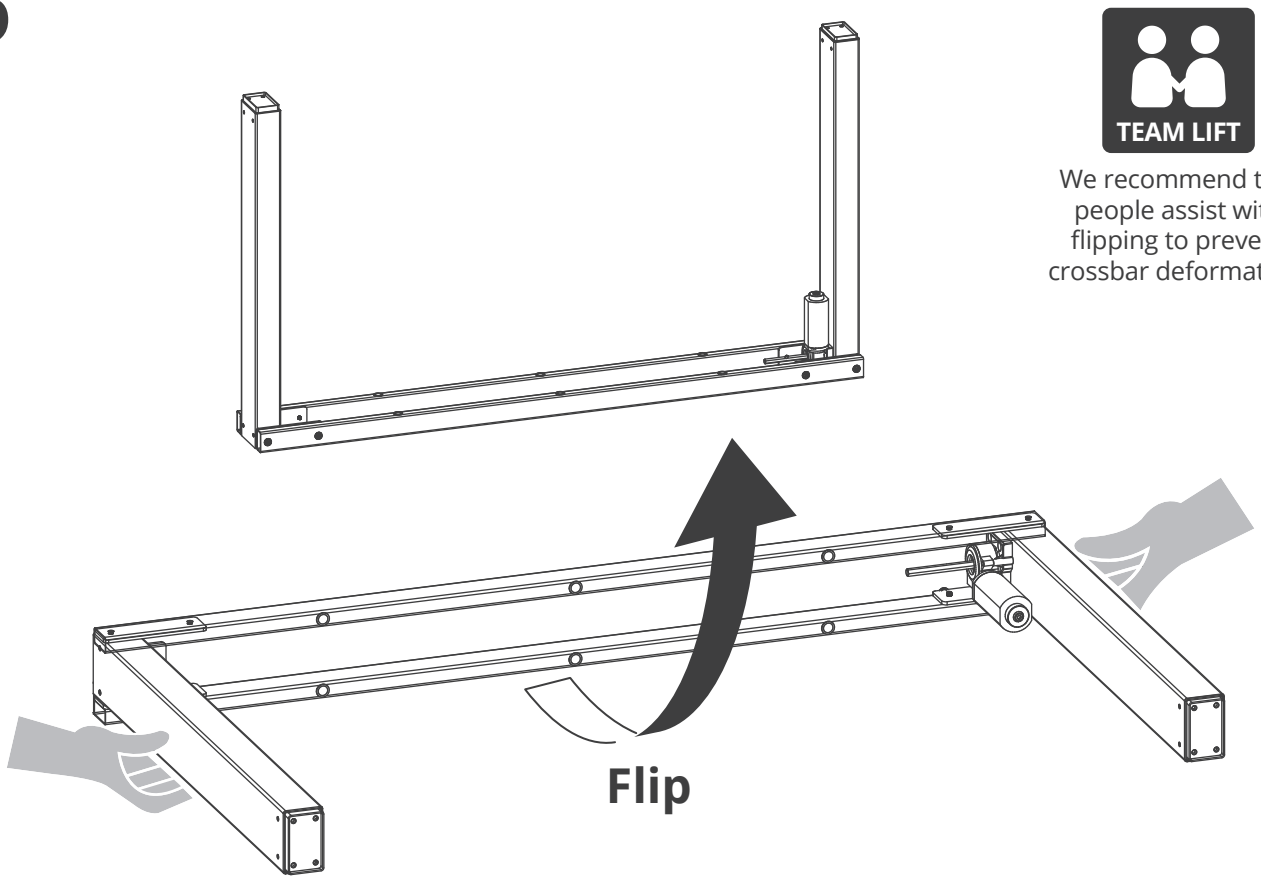

TEAM LIFT

We recommend two people assist with flipping to prevent crossbar deformation.

7

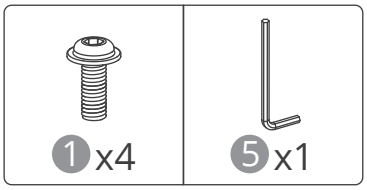

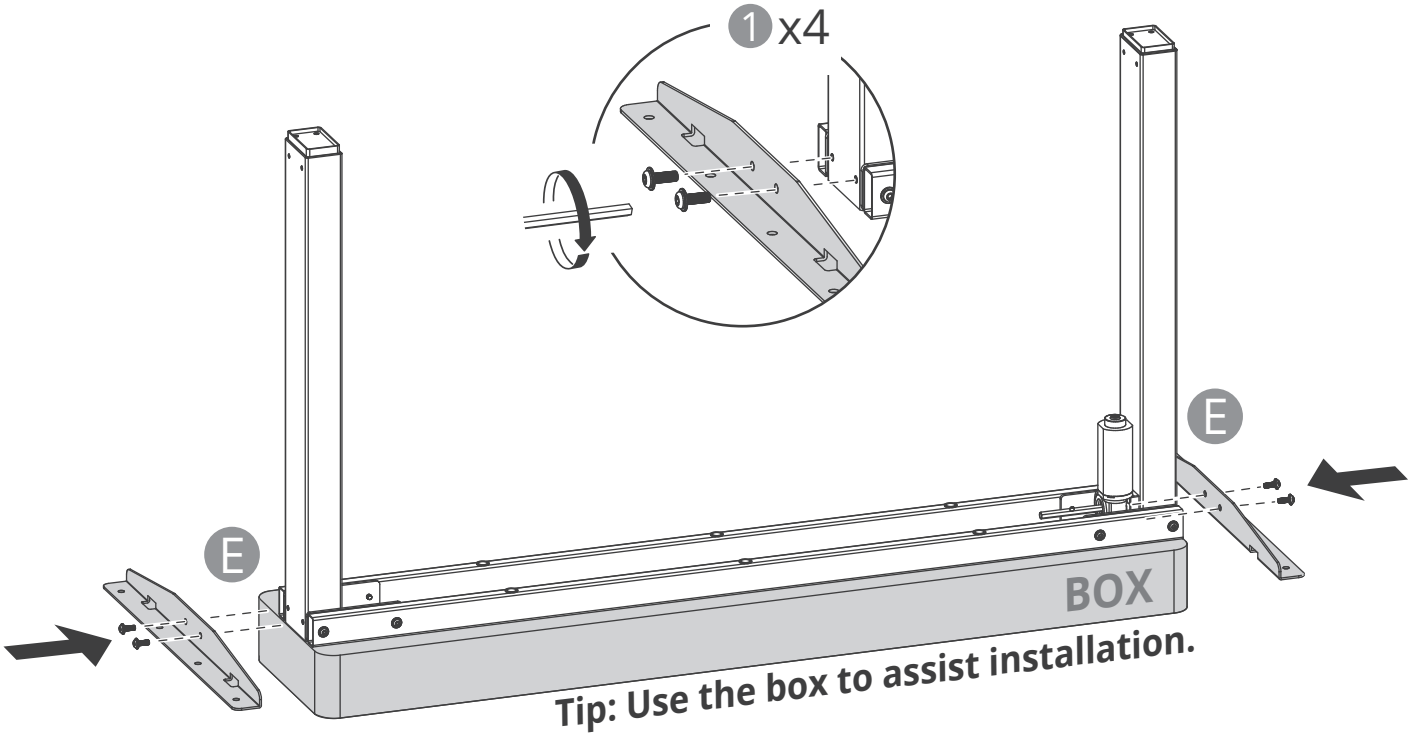

Tip: Use the box to assist installation.

8 **Caution**: Ensure all pre-drilled holes are aligned before fully tightening the screws. Drive the screws straight down (perpendicular to the surface) to secure the desktop. Recommended torque: 6 to 10 N.m (Do not overtighten).

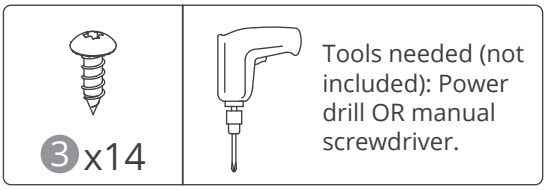

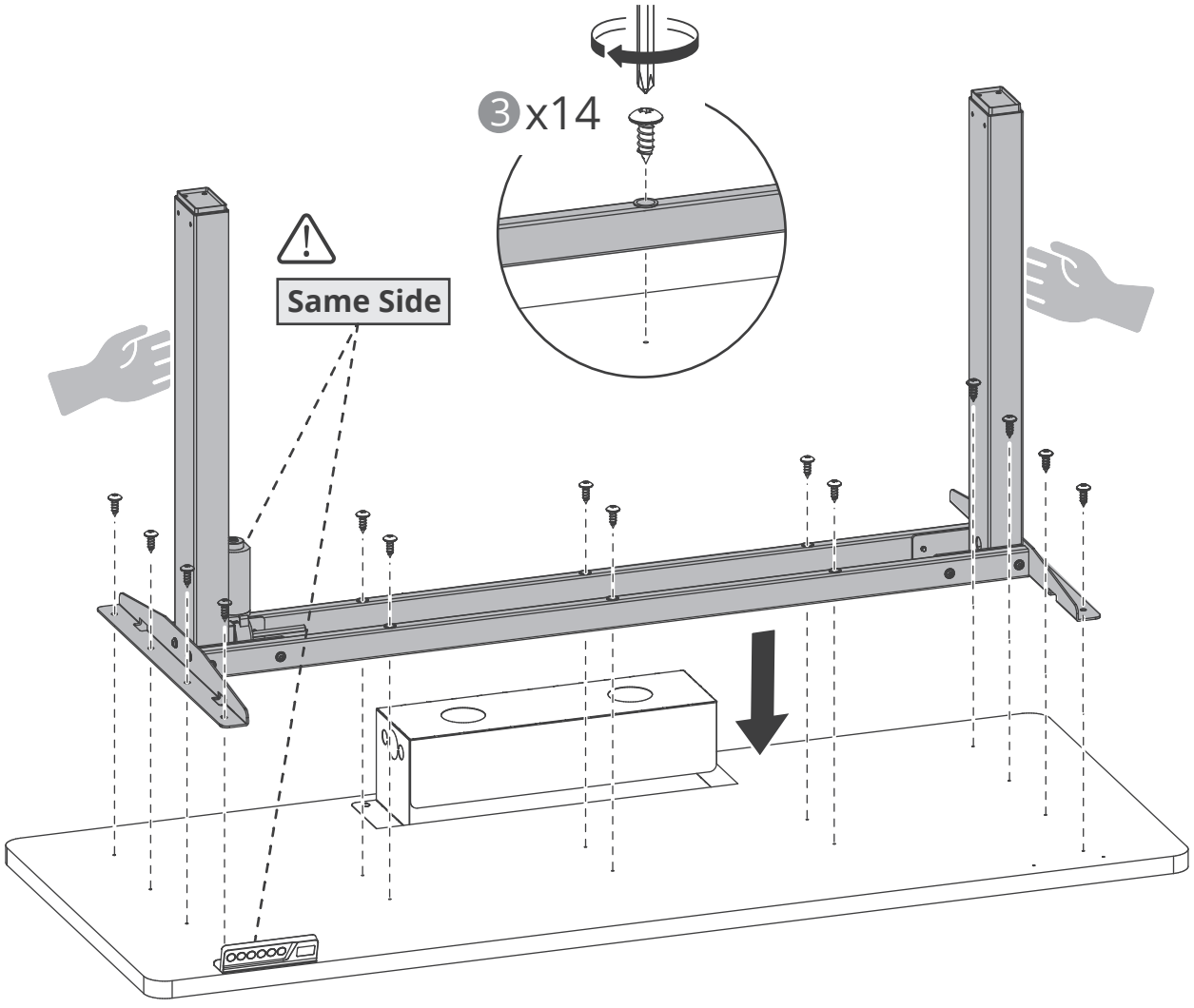

9

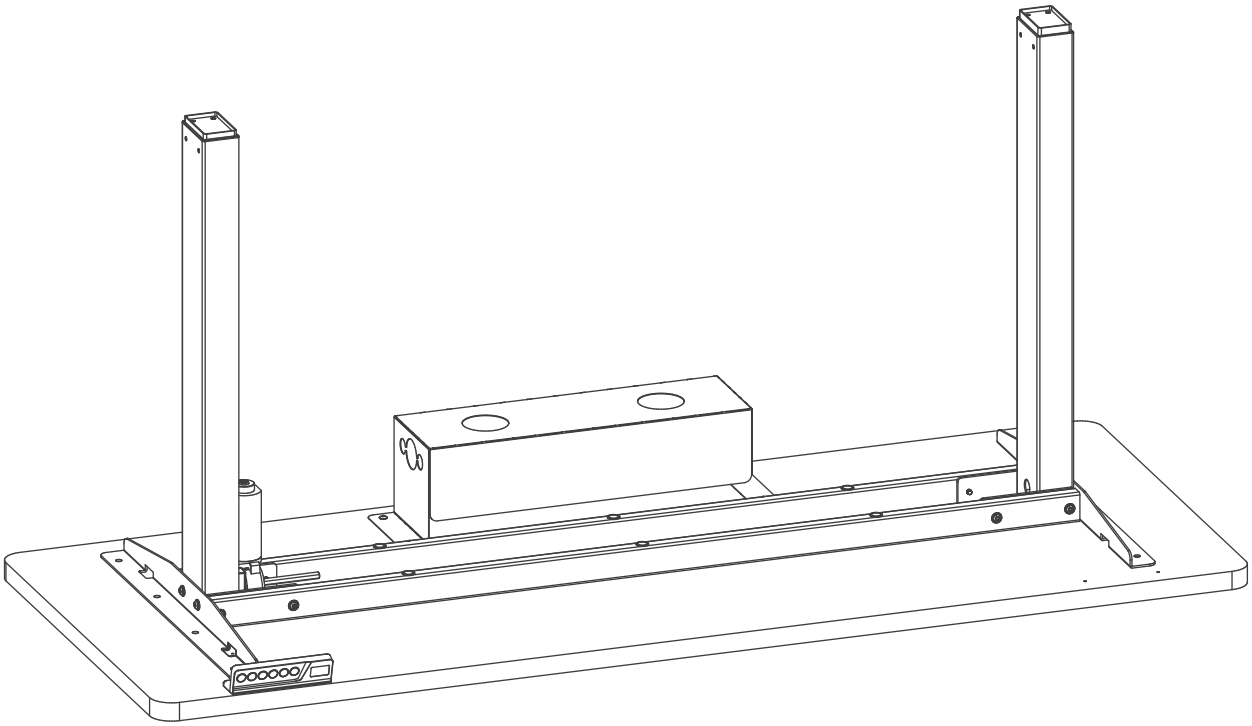

10

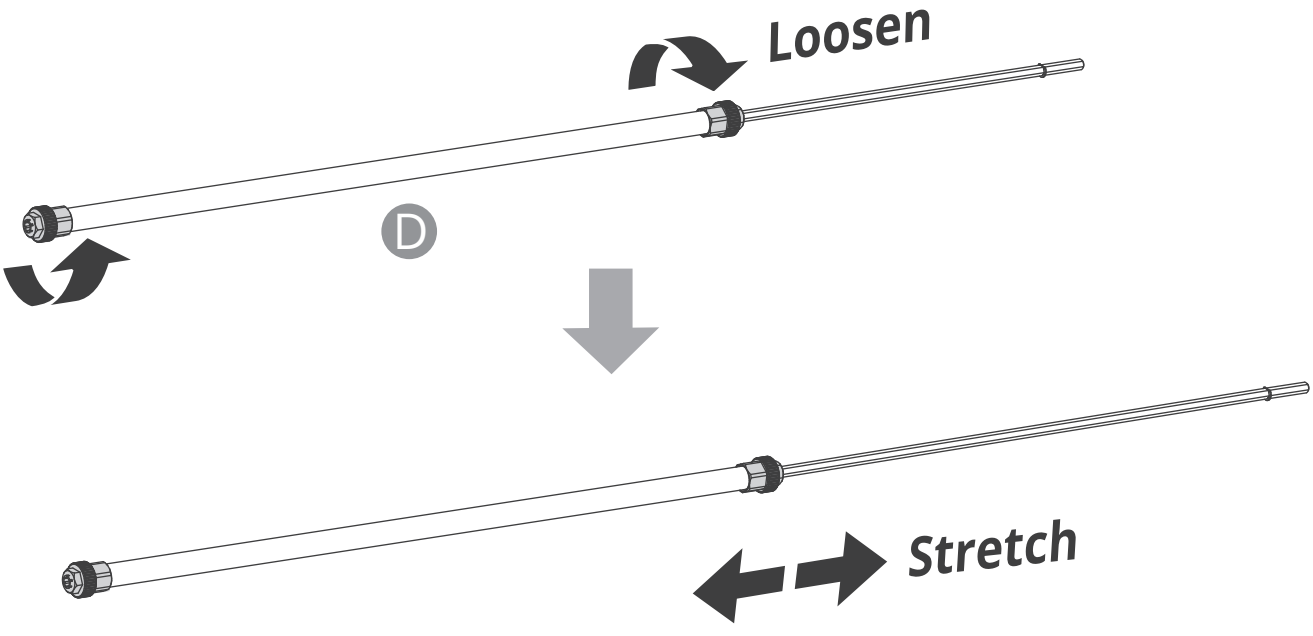

11

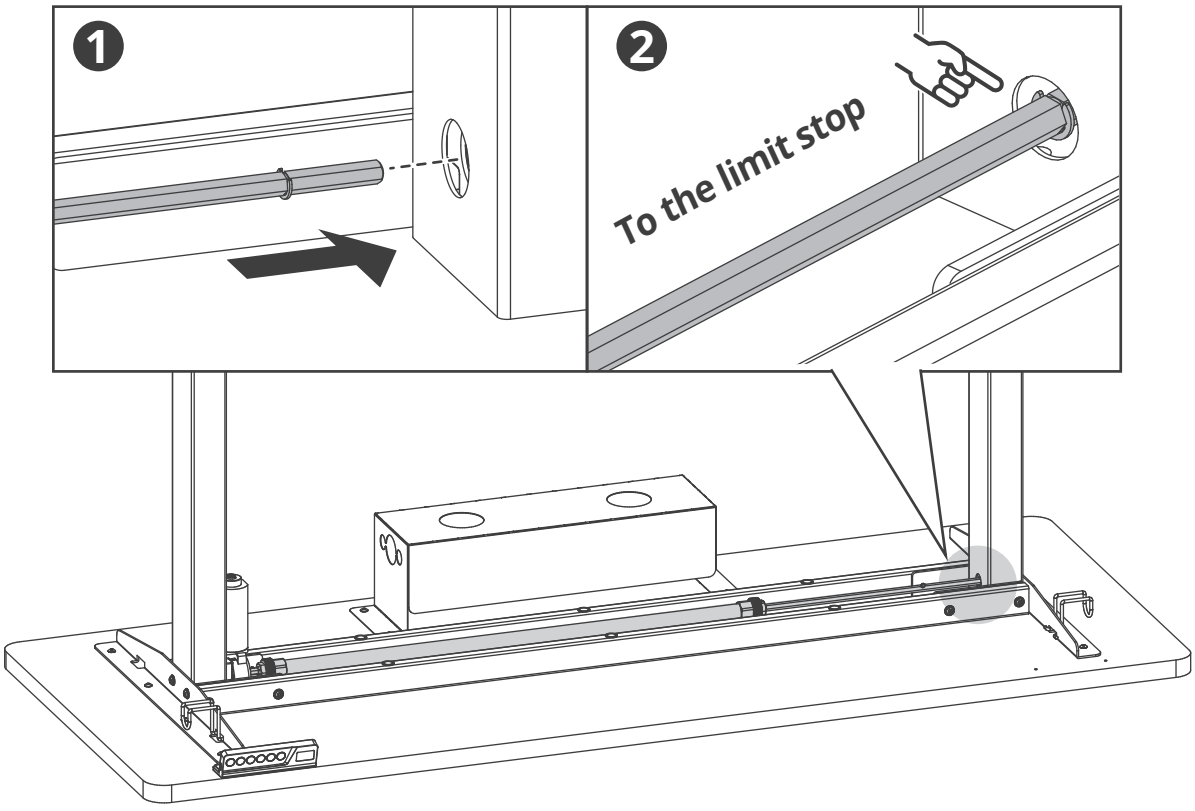

Leveling Adjustment for the Legs

1 **Ensure both legs are at the same height.**

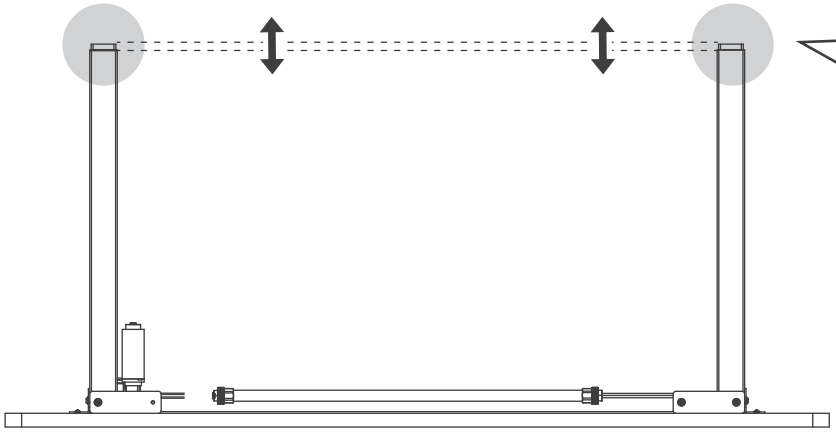

The gaps shown here must be identical, indicating horizontal alignment.

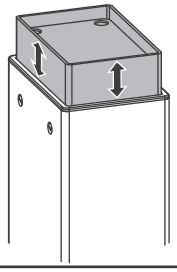

2 **Adjustment Procedure.**

Uneven Height

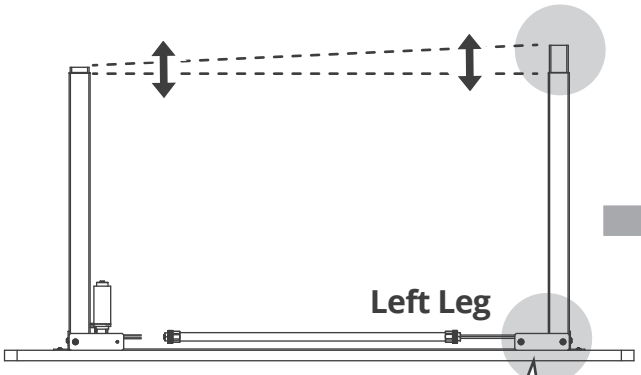

Left Leg

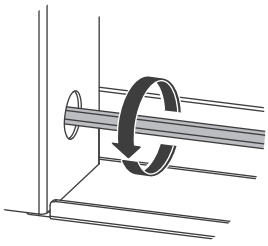

If the leg heights differ, **rotate the transmission rod** to align them.

Level Aligned

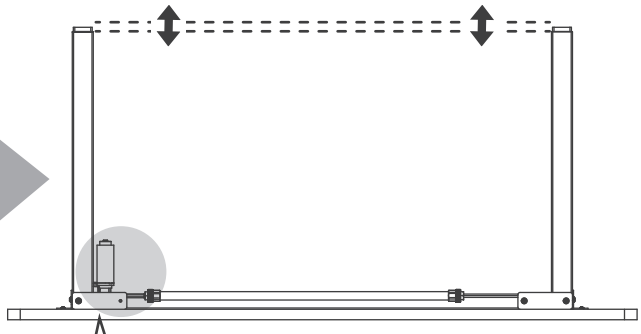

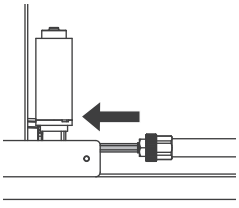

Important: Ensure both desk legs are fully lowered and completely level. Once leveled, slide the sync rod sleeve onto the sync rod on the motor side.

12

6 x1

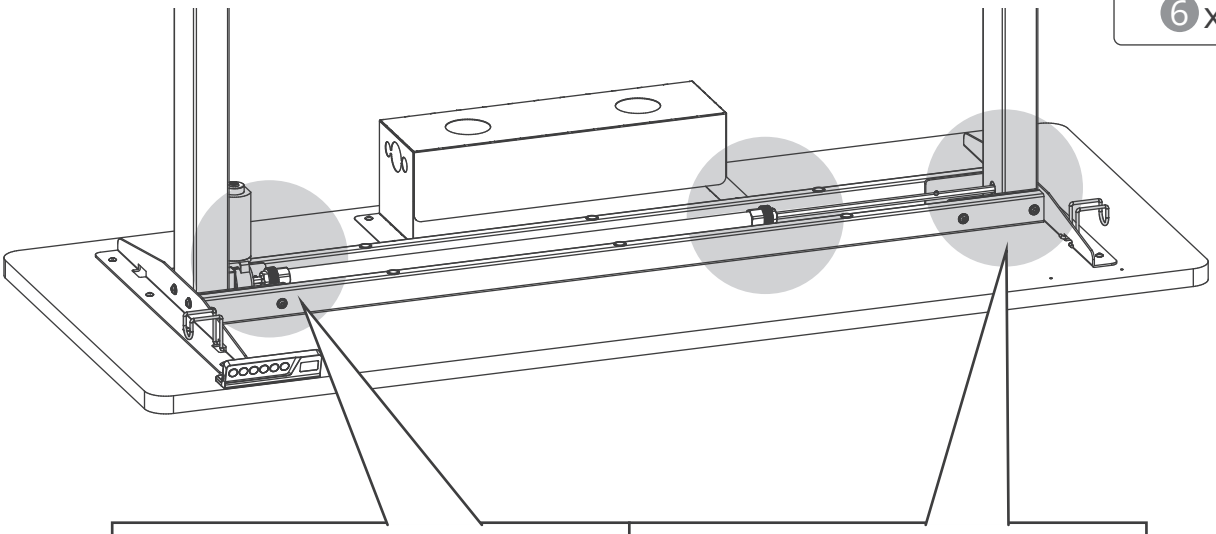

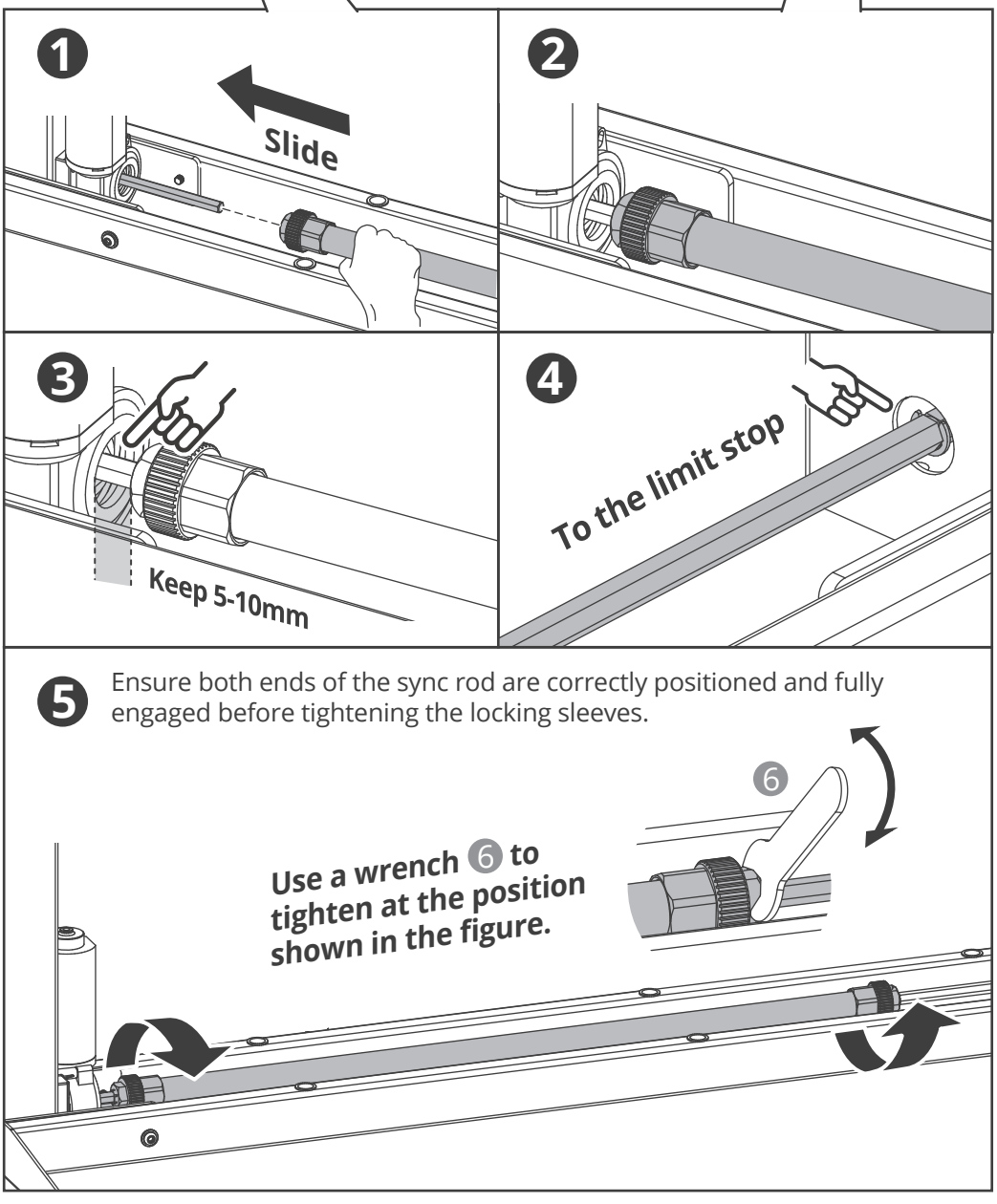
1
Slide
2
3
Keep 5-10mm
4
To the limit stop
5
Ensure both ends of the sync rod are correctly positioned and fully engaged before tightening the locking sleeves.
6
Use a wrench 6 to tighten at the position shown in the figure.

13

Tip: There are 4 available mounting positions. You can install the two accessory hooks in whichever 2 locations you prefer.

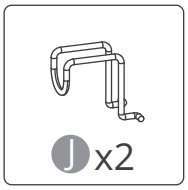

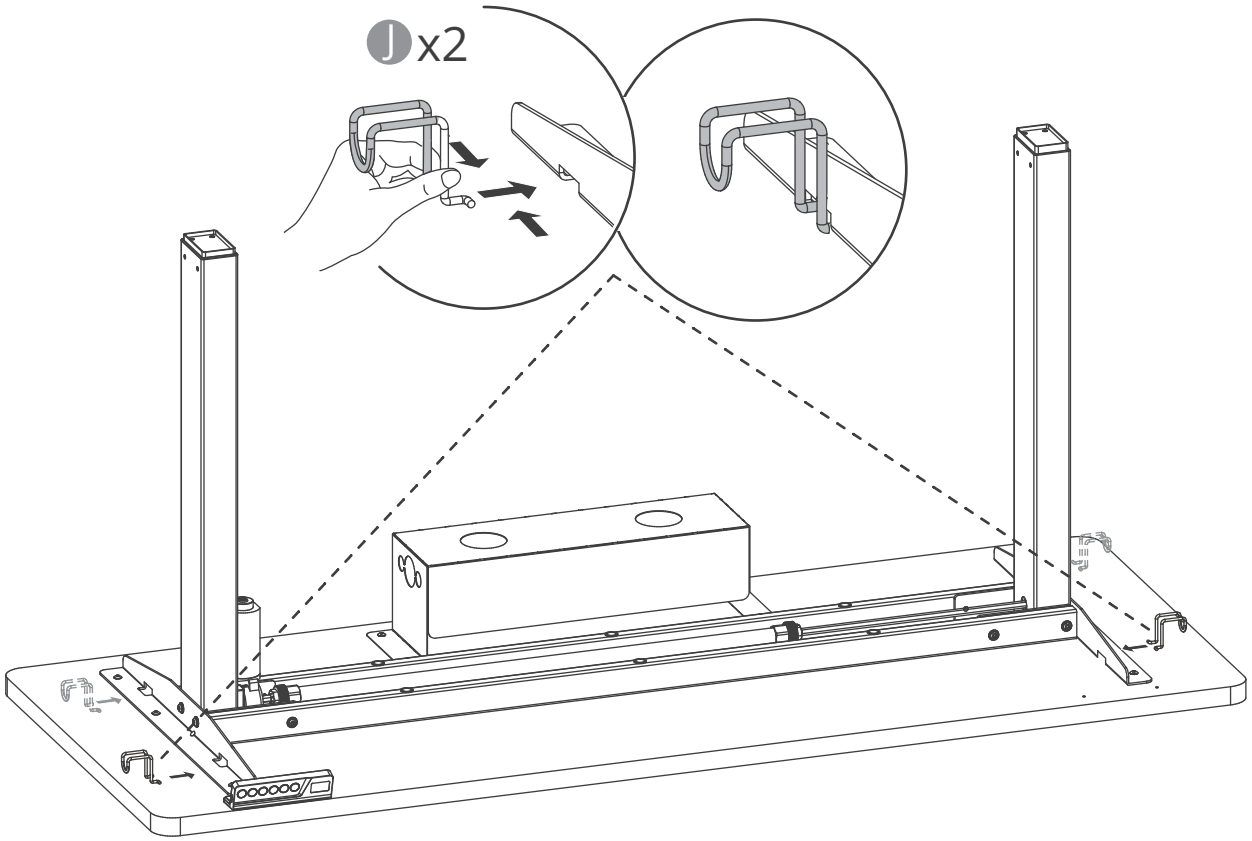

14

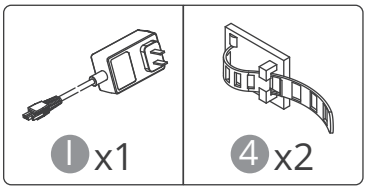

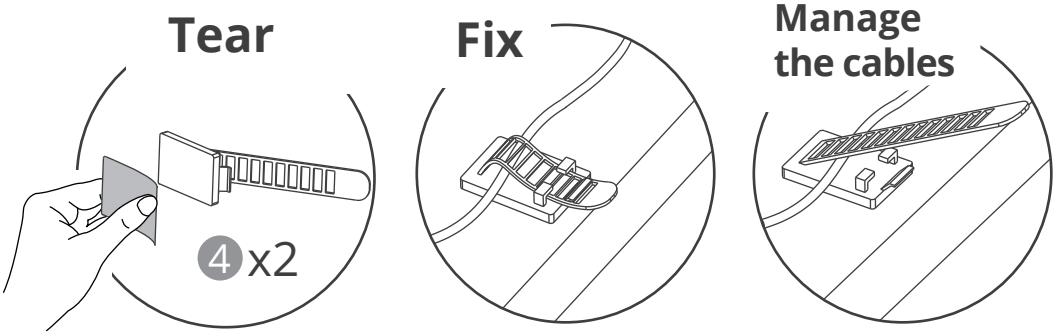

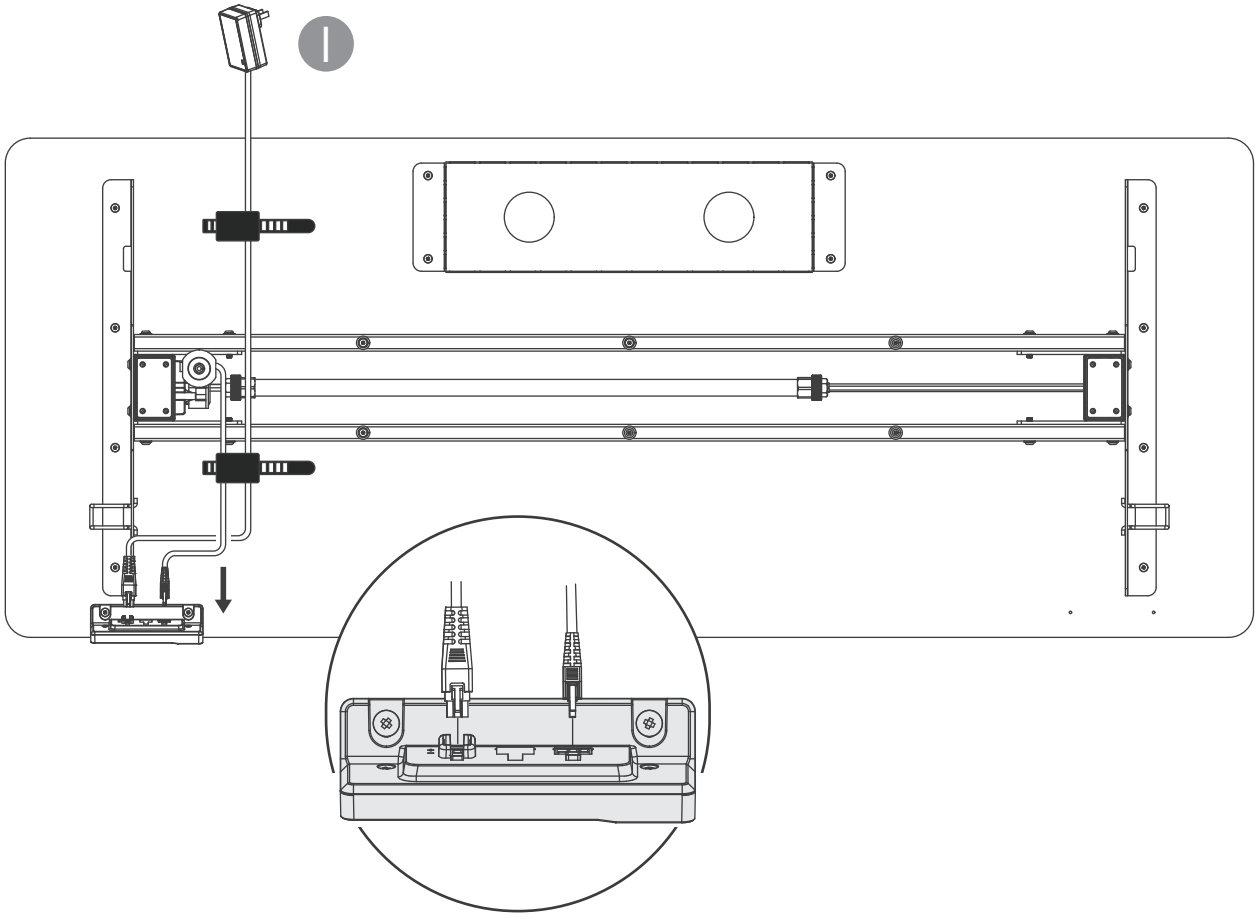

15

Tighten all screws on the desk frame securely to ensure the desk's stability.

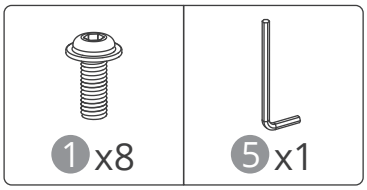

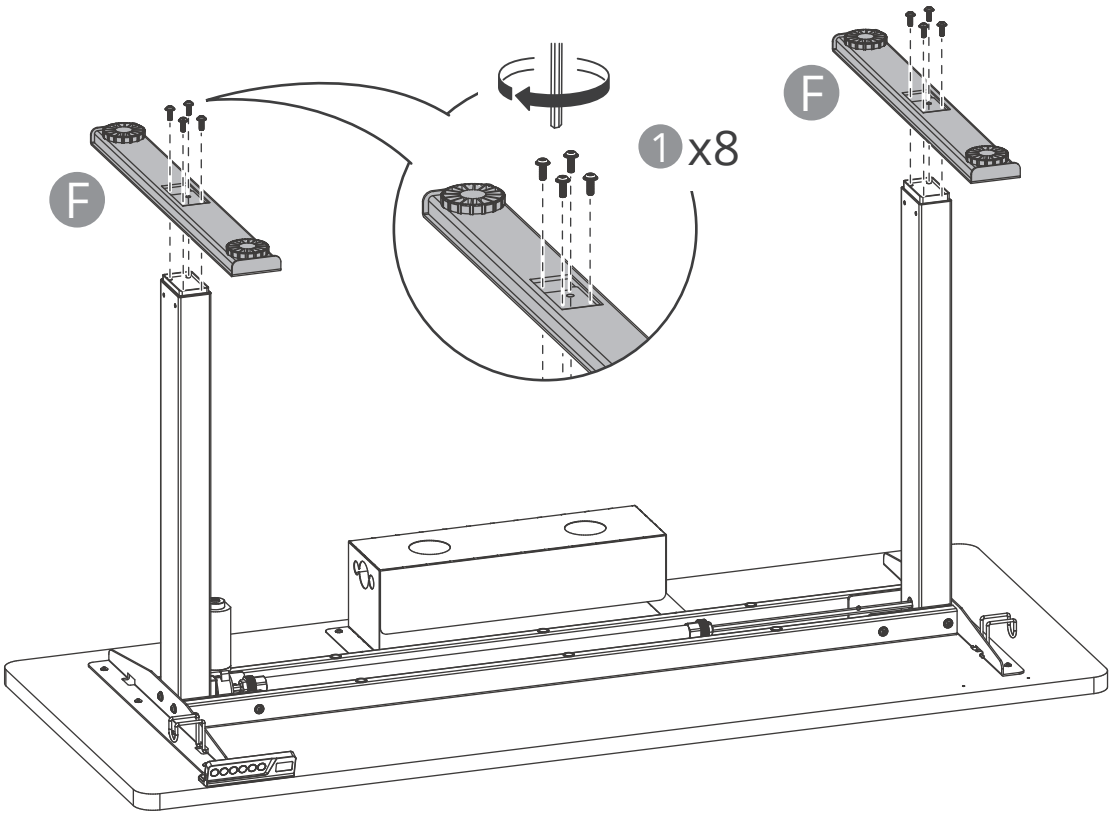

16

TEAM LIFT

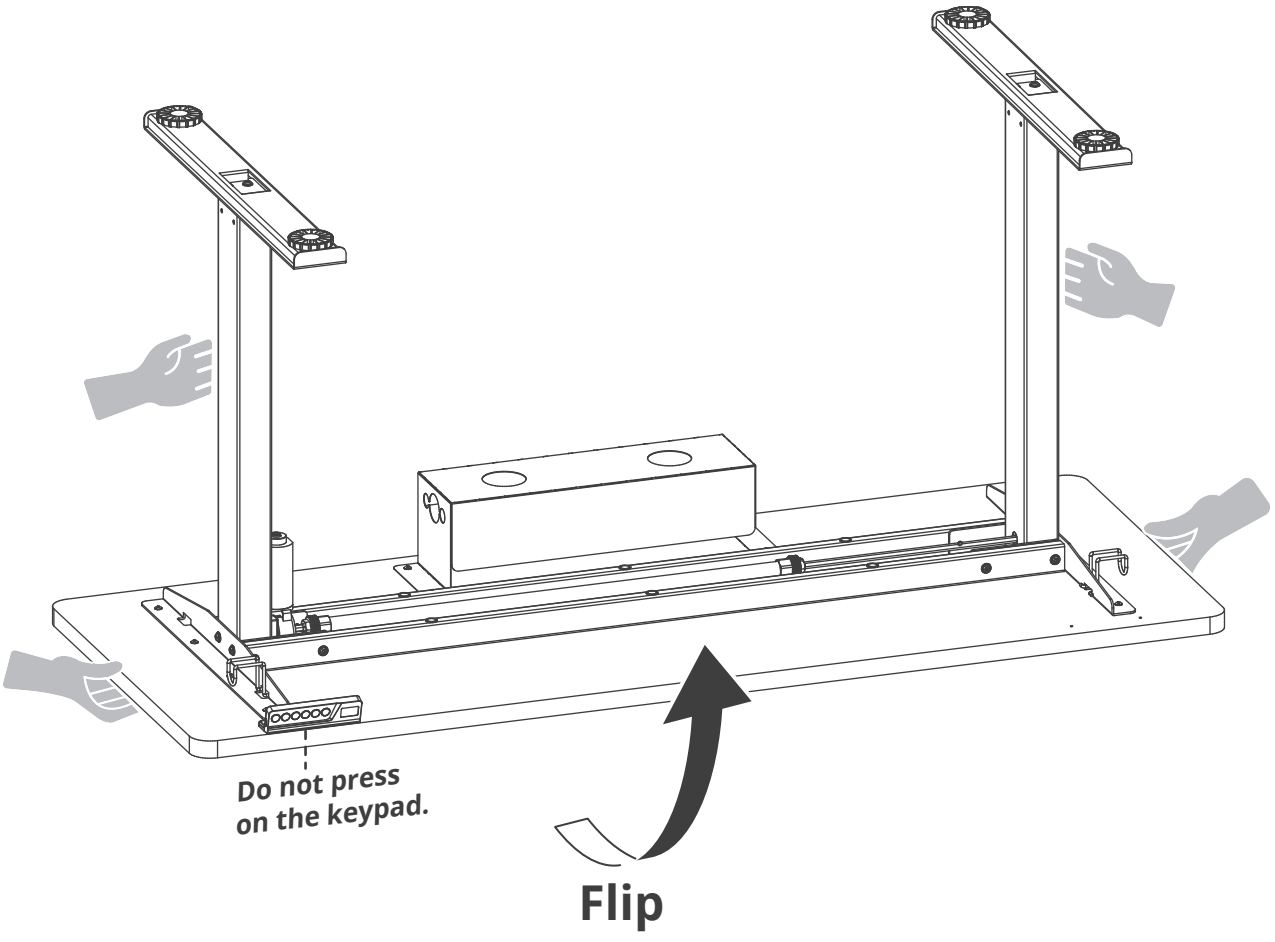

17

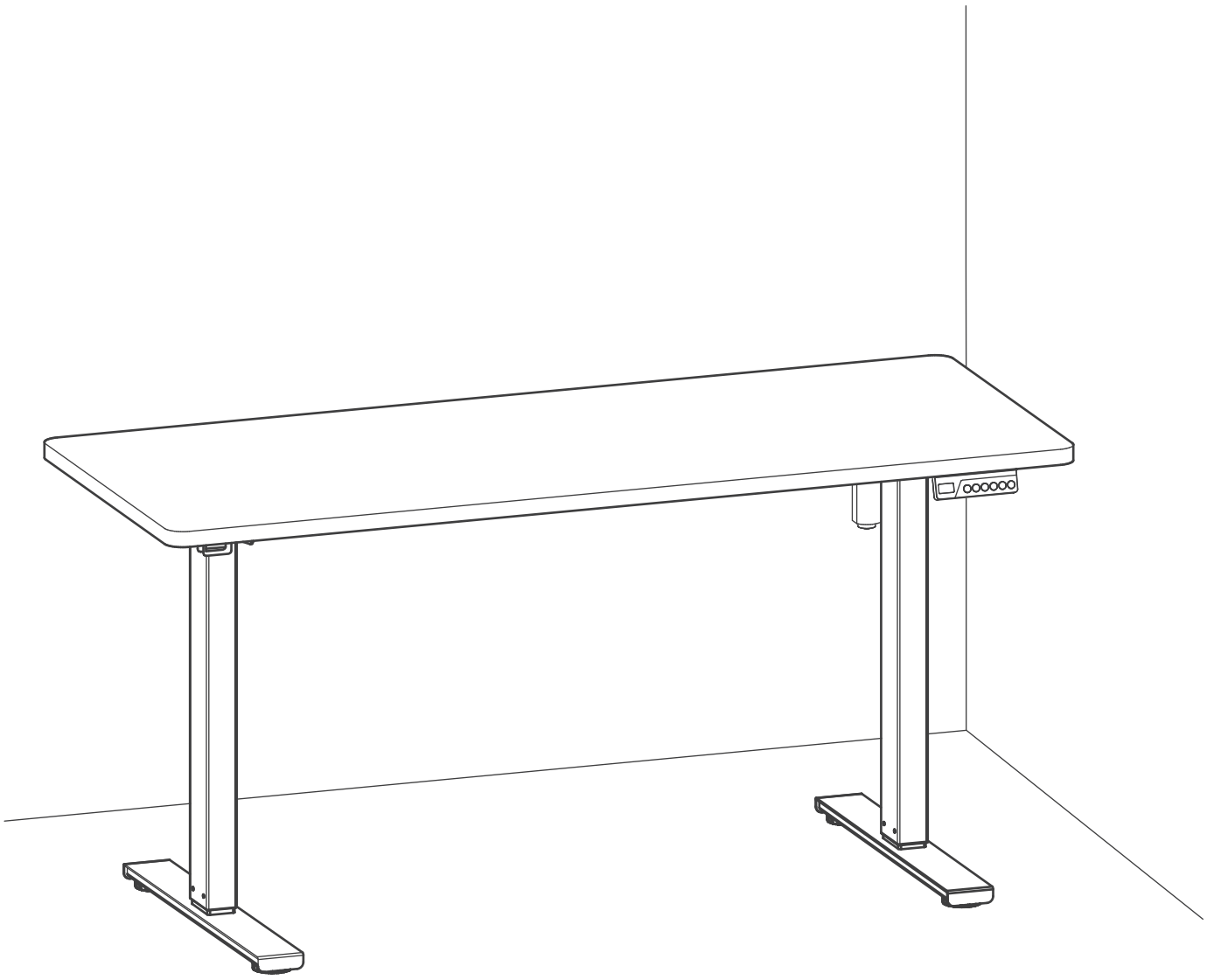

Handset User Guide

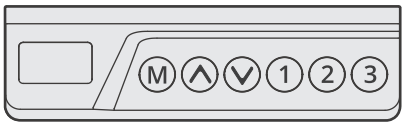

Connect Power

- Connect the control box to the power adapter.
- Plug the power cord into a grounded electrical outlet.
- The display will show the current desk height.

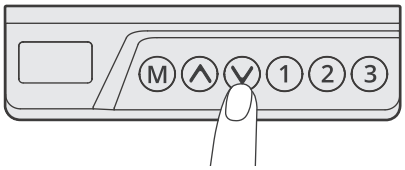

Reset (First Use or Reassembly)

- Press and hold the ⌄ button until the desk stops for 5 seconds. Code rST will appear on the display.
- Continue holding ⌄ until the legs move to the lowest position, rebound slightly, and stop.
- Release ⌄ . Reset is complete.
- If interrupted, repeat the reset until successful.

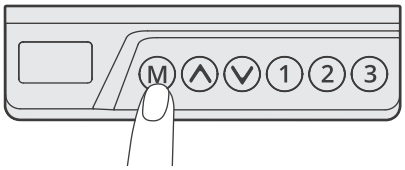

Memory Presets: Save a Height

- Adjust desk to desired height.
- Press the M . Display shows S- .
- Press one of the preset keys (1 , 2 , or 3).
- Height is saved. Memory is retained even after power off.

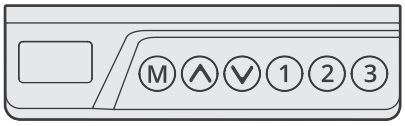

Memory Presets: Recall a Height

- Press the chosen preset key (1 , 2 , or 3) .
- The desk moves automatically to the stored height.
- Press any key to stop movement.

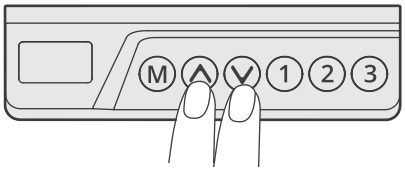

Child Lock

- **Lock**: Press and hold ^ + ⌄ for 5 seconds. Display shows Loc .
- **Unlock**: Repeat the same action for 5 seconds. Display returns to numbers.

Menu Settings

- Enter Menu: Press and hold M for 5 seconds.

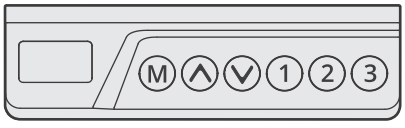

Options

- PC0–PC5: Upward collision sensitivity (0 = off; 1–5 = increasing sensitivity).
- dC0–dC5: Downward collision sensitivity.
- U-0/U-1: Display units (cm/inch).

- **Navigate**: Short press M to switch options.
- **Adjust**: Use ^ / ⌄ to change values.
- **Save & Exit**: Hold M until progress bar completes.
- Auto exit after 10 seconds of no operation.

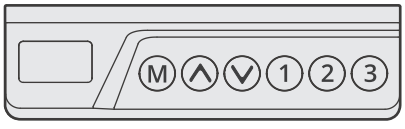

Energy-Saving Mode

- After 1 minute of no operation, the display turns off.
- Press any button to wake.

Error Codes & Troubleshooting

Code	Meaning	Solution
SC0	Self-test failure (standby current)	Reconnect power. Replace handset if needed.
SC1	Power supply voltage error	Reconnect power. Replace handset or adapter if issue persists.
HOT	Overheating protection	Wait ~18 minutes. Error clears automatically.
r-6	Power voltage abnormal	Clears once voltage recovers. Replace handset/adapter if frequent.
rst	Reset not complete	Perform reset again.
E11	Overload protection	Wait 20 sec. Reduce load or check mechanism.
E12	Motor phase missing	Check motor cables. Reconnect and reset. Replace motor cable or handset if issue remains.
E13	Motor hall signal error	Check and reconnect motor cables, then reset. Replace motor cable or handset if issue remains.
E14	Obstruction detected	Legs retract ~5 cm / 1.97 in and stop. Clears automatically.
E15	Motor jam	Compare display with actual desk height and reset. If unresolved, inspect legs or motor.
E17	Mechanical fault	Inspect and replace motor/legs if defective.

Frequently Asked Questions（FAQ）

Q: The desk won't move.

A: Check all cable connections and ensure power is on. Perform a reset.

Q: The display shows the wrong height.

A: Reset the system to recalibrate.

Q: The desk stops during movement.

A: Check for overload or obstacles under the desk.

Q: Error code appears on display.

A: Refer to the Error Codes table above.