ASSEMBLY INSTRUCTIONS

40” / 48” Desktop

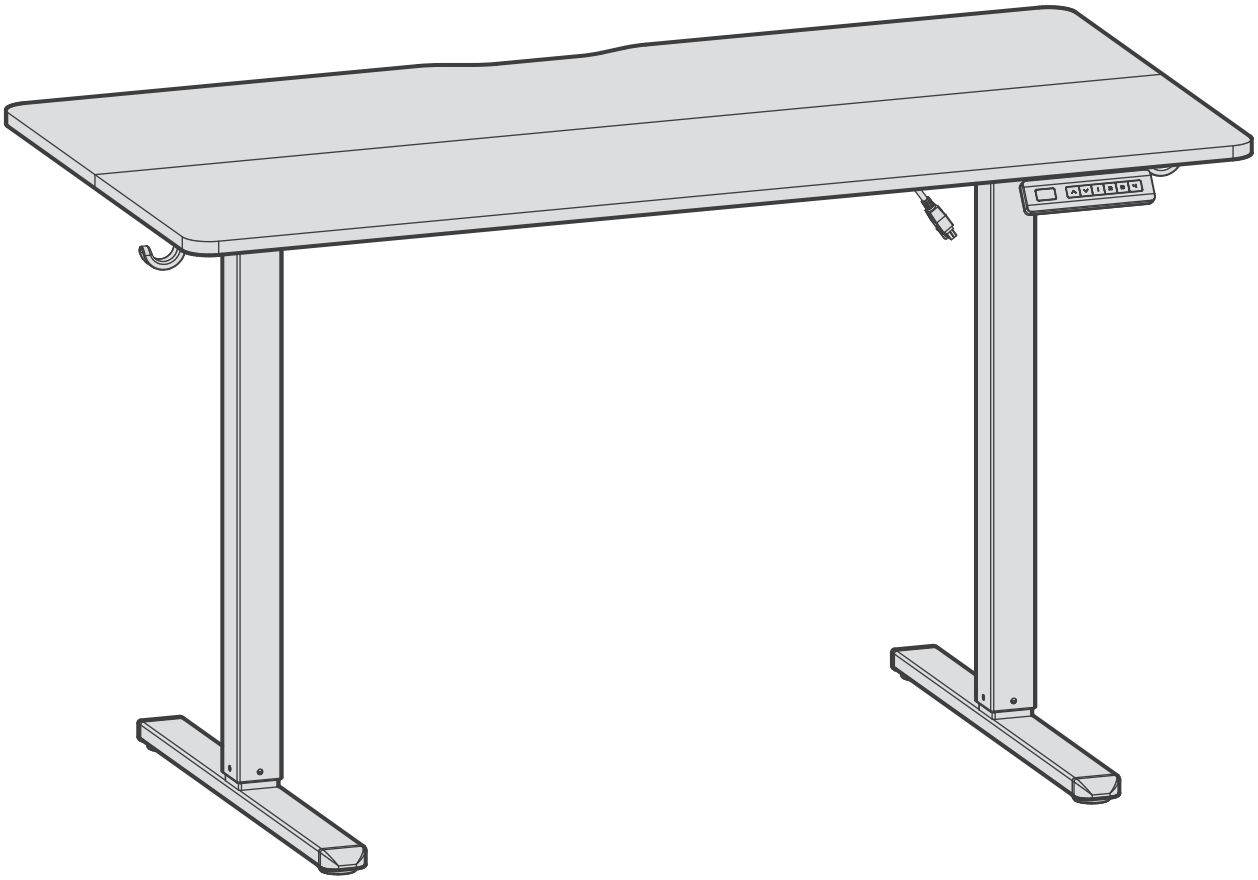

Scan QR code for installation video

support@yfs.life

yfs.life/SDE0001-jch5050

Caution

- Keep children and animals away from the desk during use. Ensure the desktop is not touching any walls.
- Remove obstacles taller than 20 "/51 cm from underneath the desk.
- Operate only in a working environment temperature of 32 °F -104 °F/0 °C - 40 °C.
- Keep product away from corrosive gases, liquids and dusty objects.
- Keep hands, feet and other body parts in a safe position during operation. Anti-collision is not automatically enabled when reset.
- The company does not bear any warranty or liability for damage and human injury caused by any abnormal or un-intended operation of the equipment.
- It is necessary to perform a manual reset after the initial installation or power cycling the equipment.

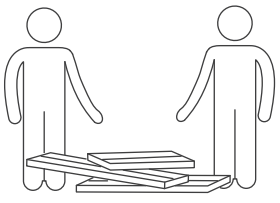		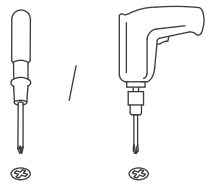	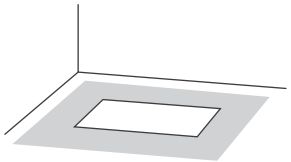
Complete through collaboration.	**Assemble on a clean, flat, and protective surface.**	**Phillips screwdriver or drill required (not provided).**	**Allow an assembly area at least twice the desktop size.**

EXPLODED VIEW DIAGRAM

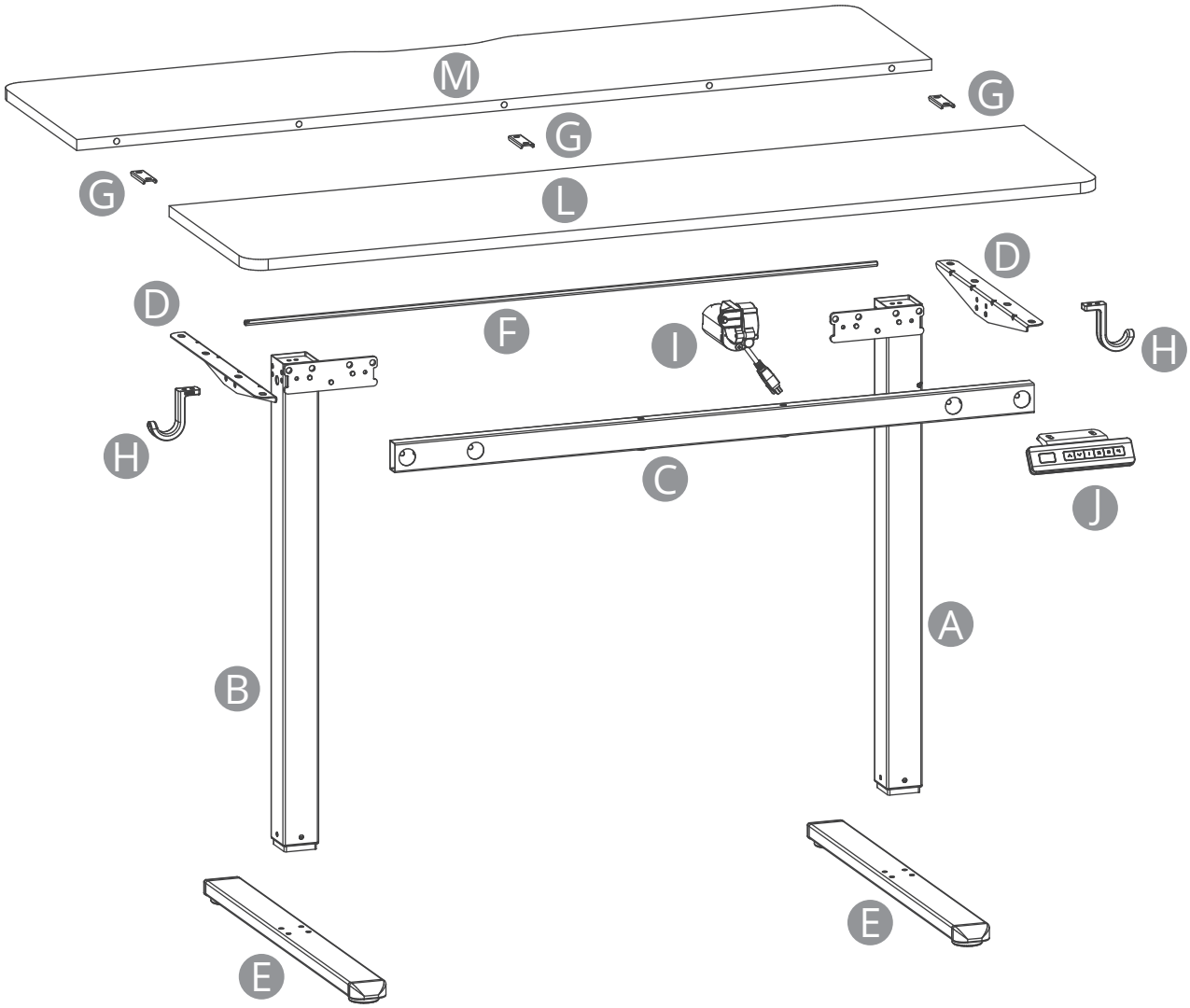

PARTS LIST



1 x8

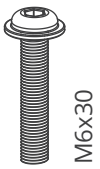

2 x8



3 x1



4 x5

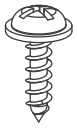

5 x22



6 x1

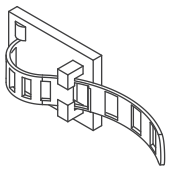

7 x2

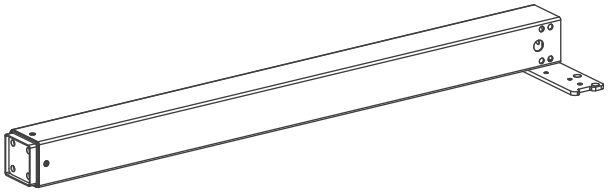

A x1

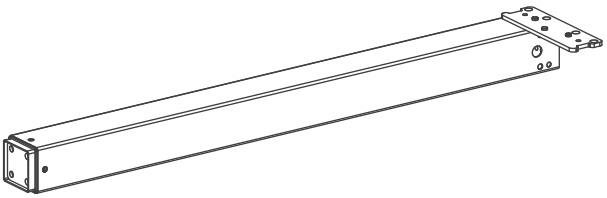

B x1

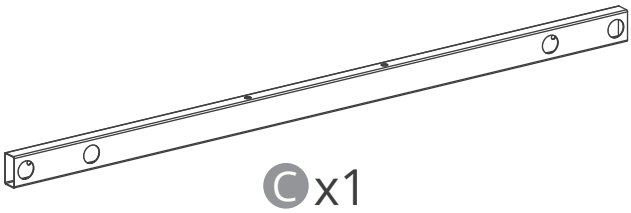

C x1
(40″/48″: 897 mm)

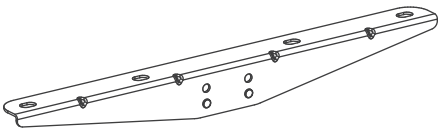

D x2
(40″/48″x24″: 350 mm)
(48″x30″: 500 mm)

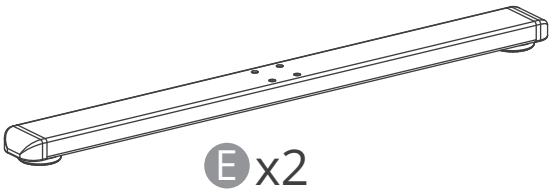

E x2
(40″/48″: 590 mm)

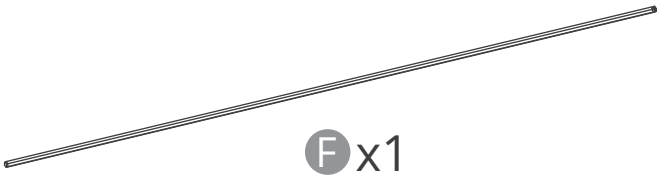

F x1
(40″/48″: 888 mm)

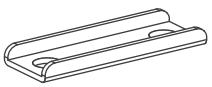

G x3

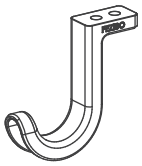

H x2

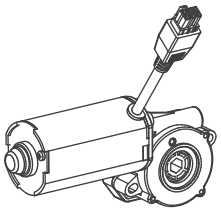

I x1

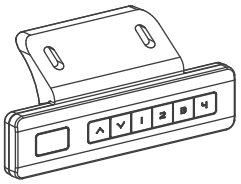

J x1

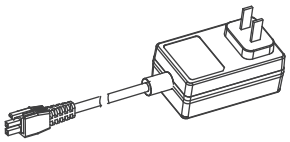

K x1

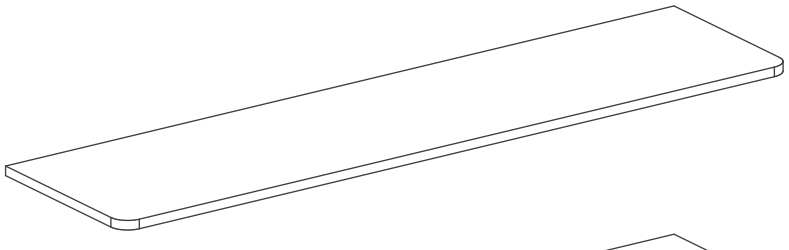

L x1

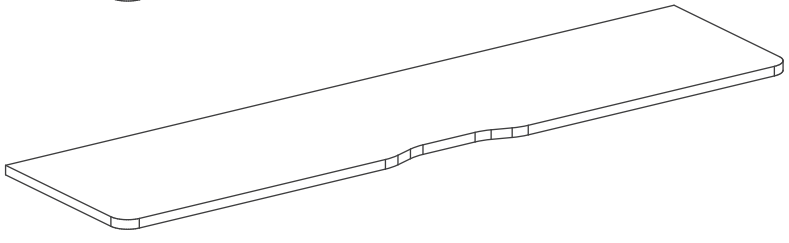

M x1

1 **Note:** Please place the desktop **on the carpet** for installation to prevent scratching the desktop.

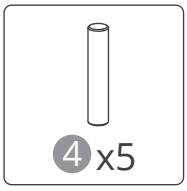

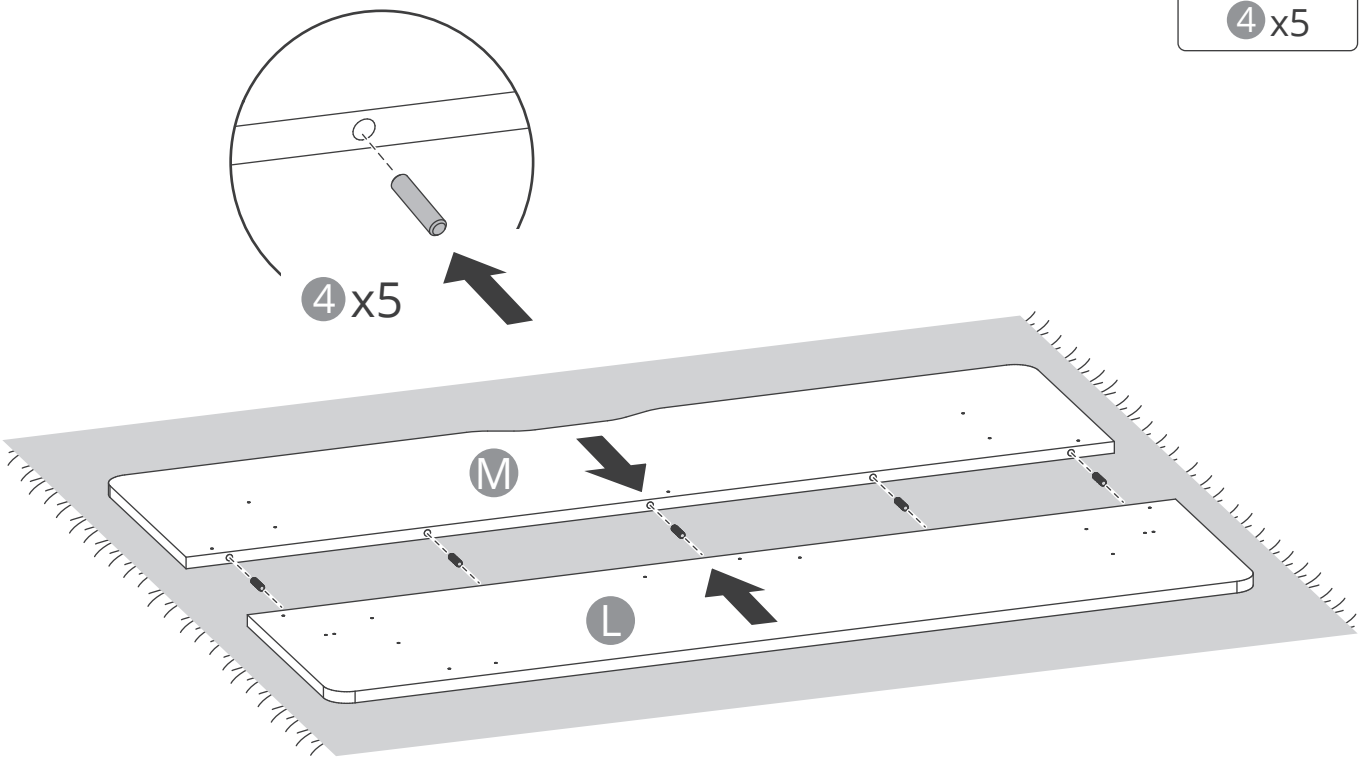

2 The recommended screw torque for locking the desktop is **6-10 N·m**; please keep the screws perpendicular to the mounting surface during installation. This will result in a flatter desktop.

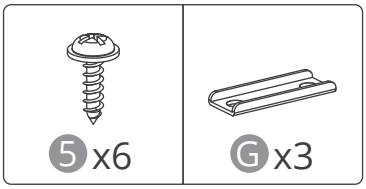

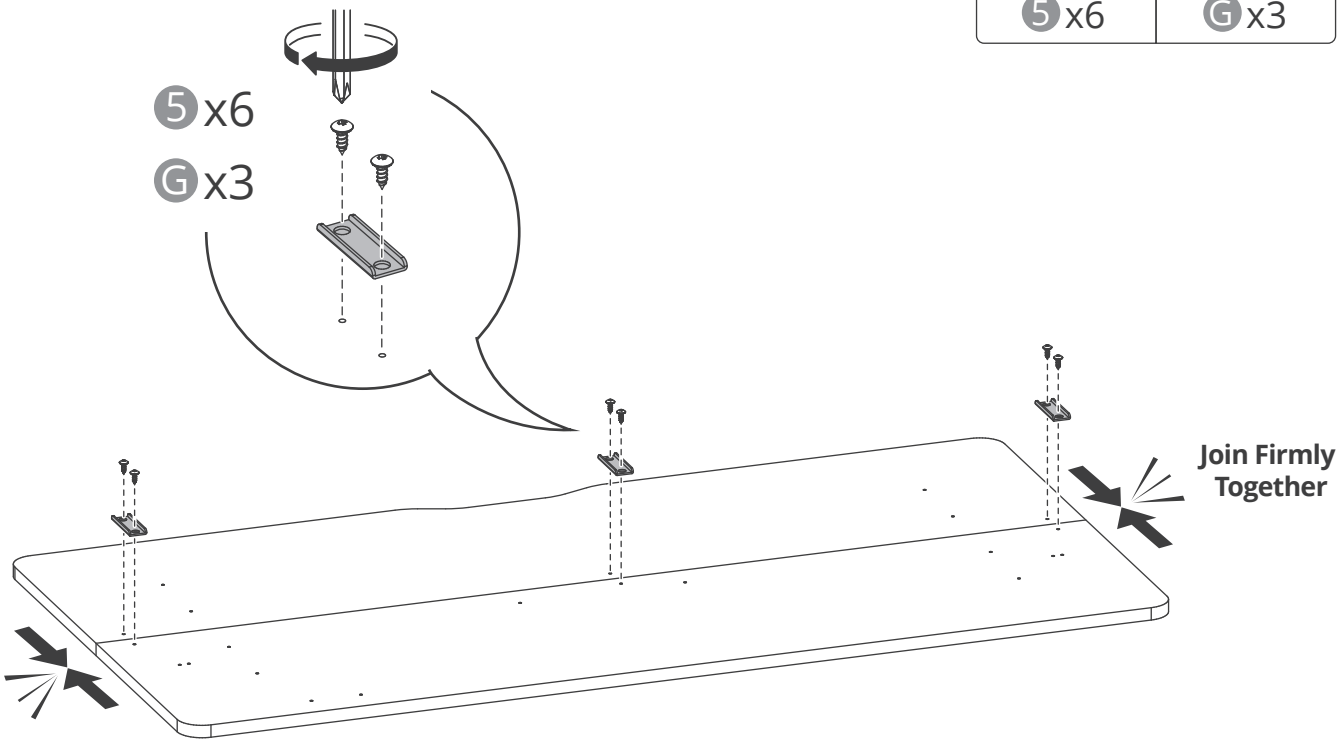

3

The recommended screw torque for locking the desktop is **6-10 N·m**; please keep the screws perpendicular to the mounting surface during installation. This will result in a flatter desktop.

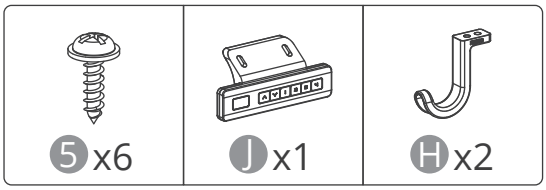

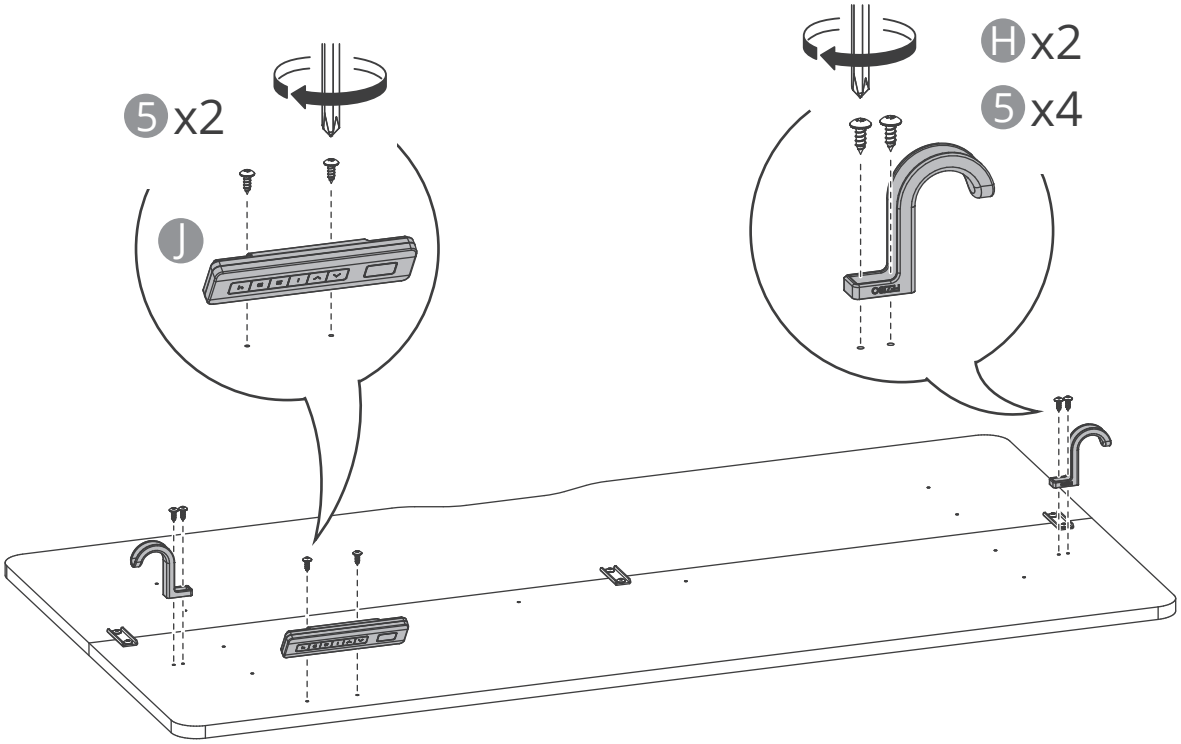

4

The recommended torque for the locking frame screws is **15 N·m**; please ensure the screws are tightened for a more stable table.

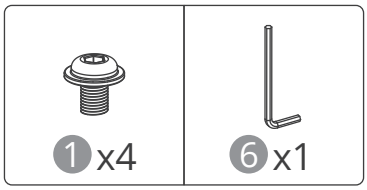

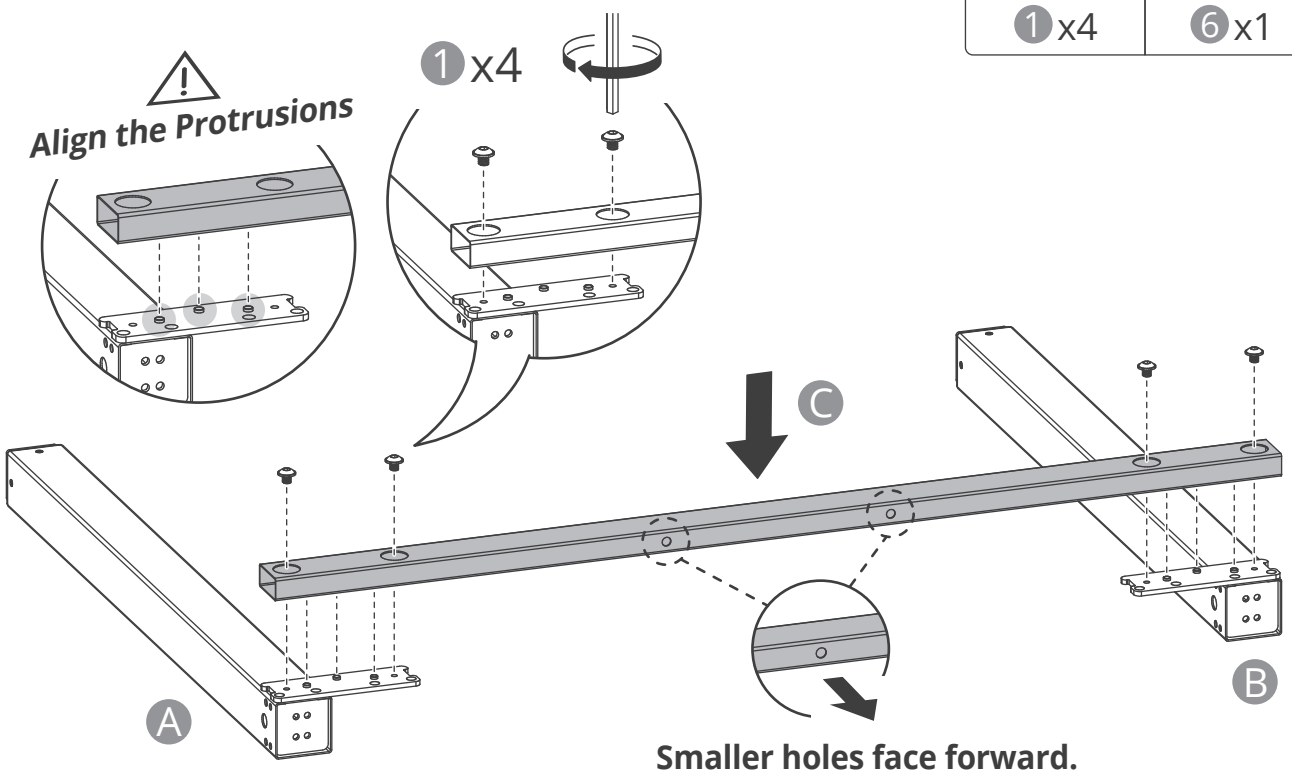

5

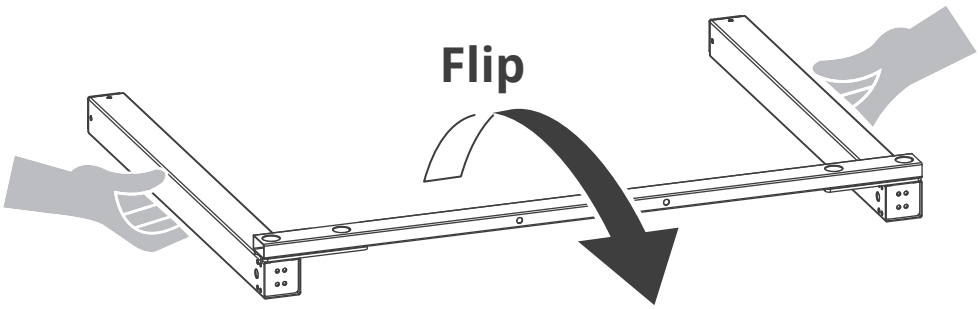

TEAM LIFT

We recommend two people assist with flipping to prevent crossbar deformation.

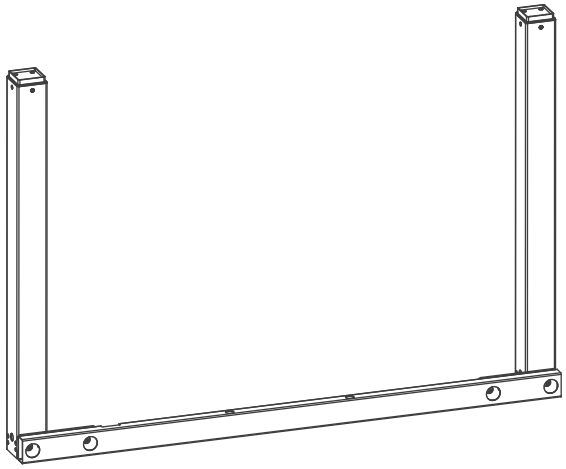

6

The recommended torque for the locking frame screws is **15 N·m**; please ensure the screws are tightened for a more stable table.

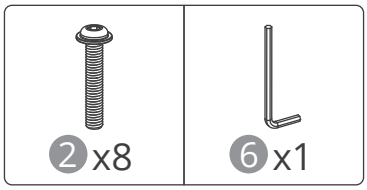

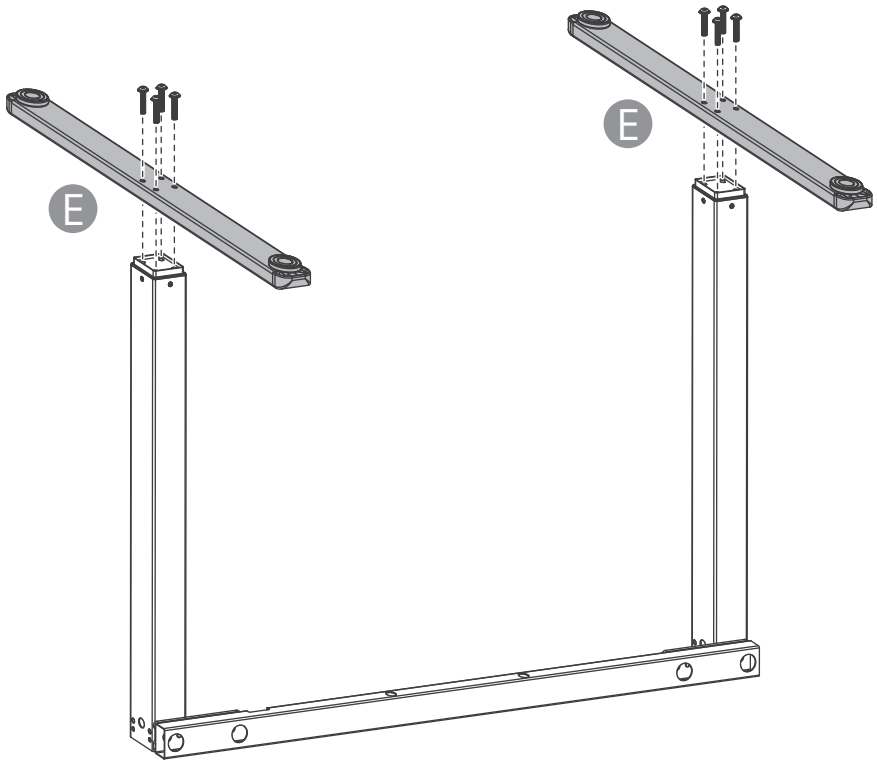

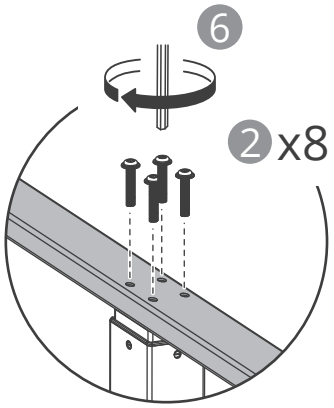

6

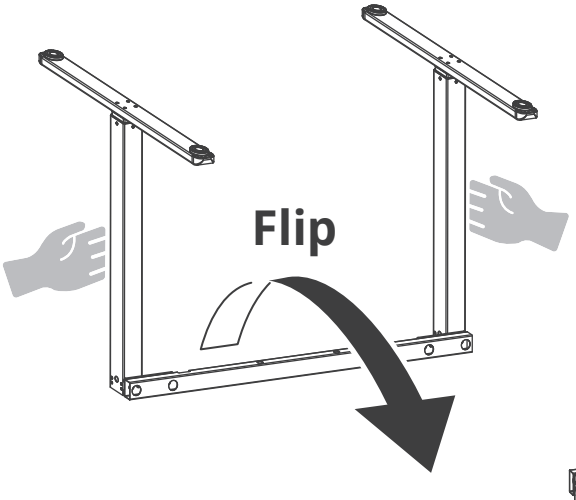

TEAM LIFT

We recommend two people assist with flipping to prevent crossbar deformation.

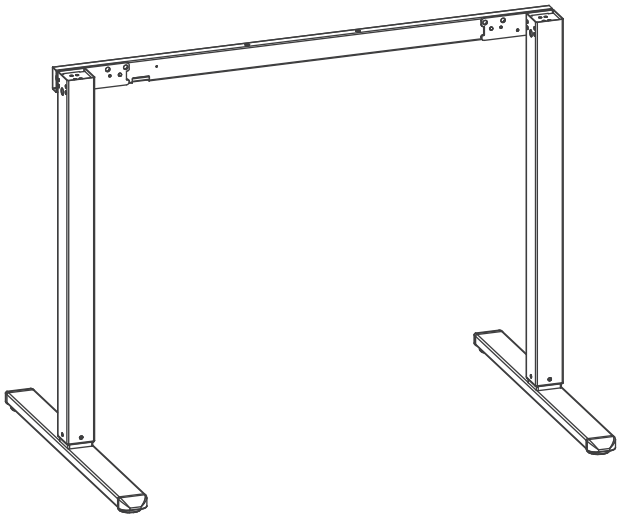

7

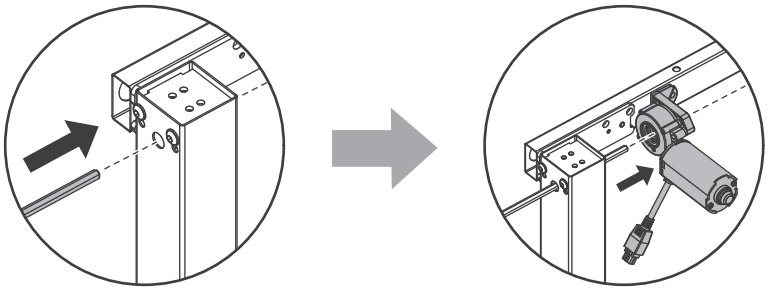

Important: Position the motor mount so it faces to the right.

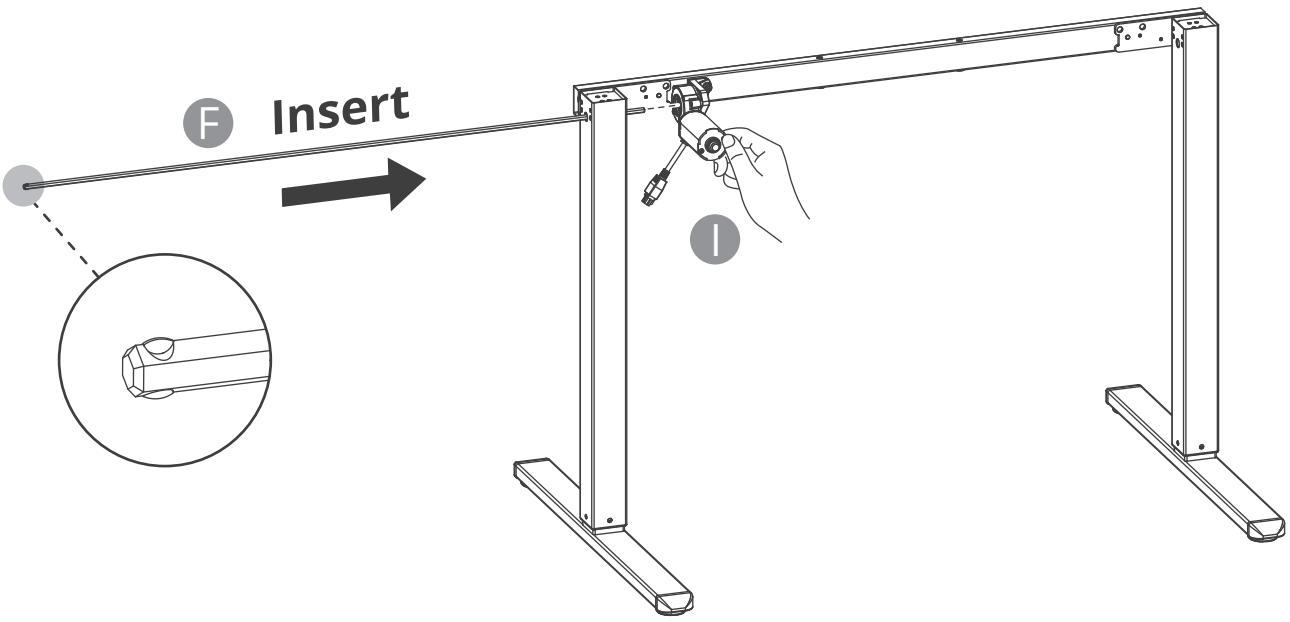

8 Gently hold the motor and adjust its angle by tilting it slightly upwards and downwards to align the sync rod with the hex hole. Slide the rod fully into the column until it rests against the limit stop.

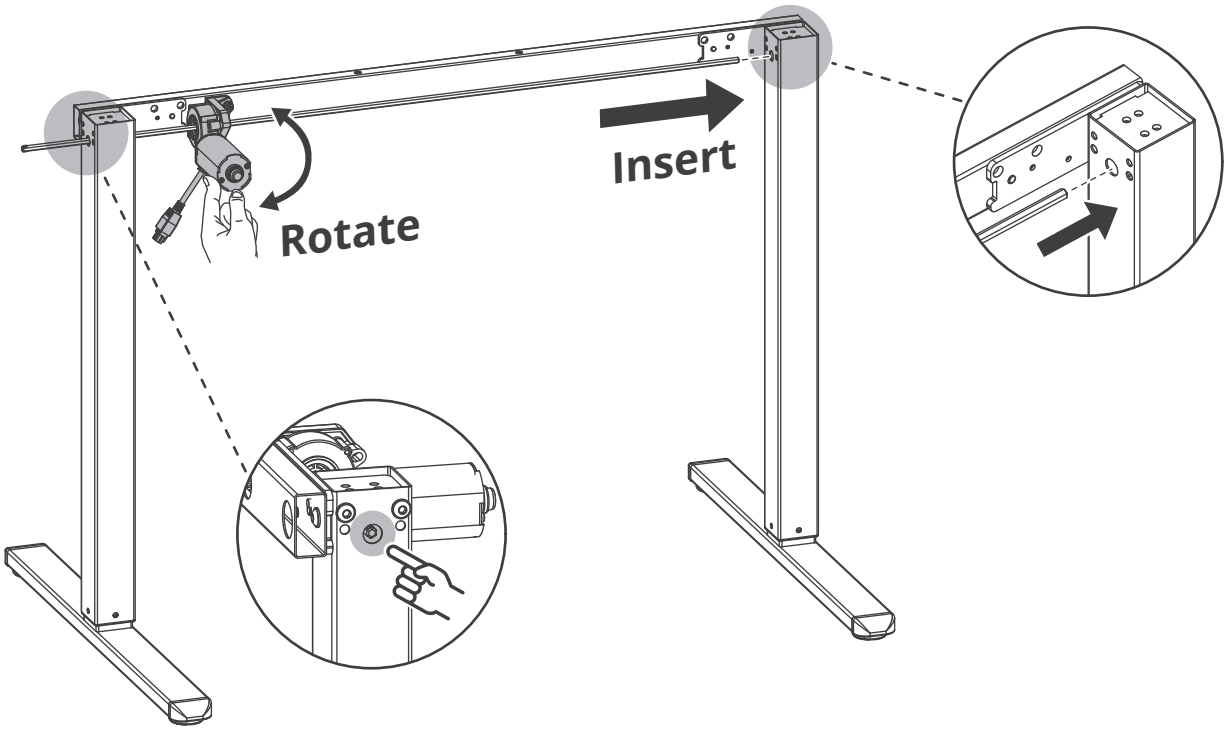

9 The recommended torque for the locking frame screws is **15 N·m**; please ensure the screws are tightened for a more stable table.

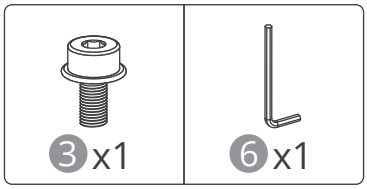

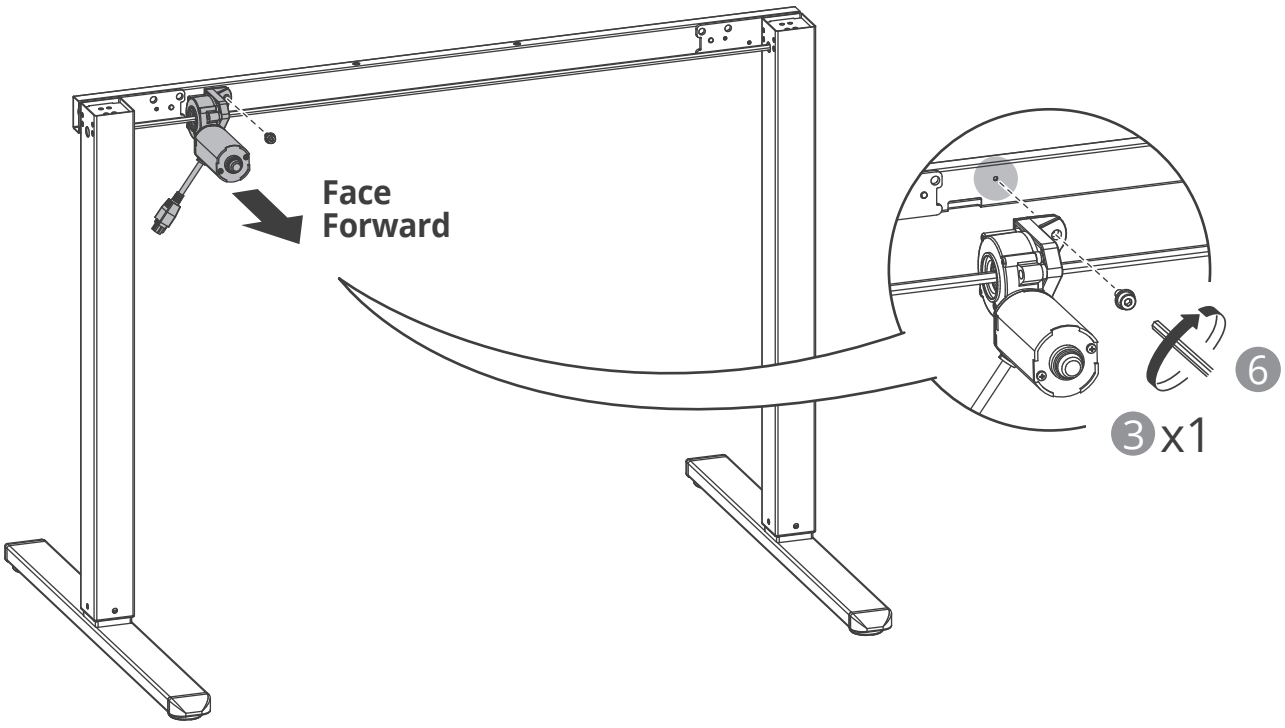

10

The recommended torque for the locking frame screws is **15 N·m**; please ensure the screws are tightened for a more stable table.

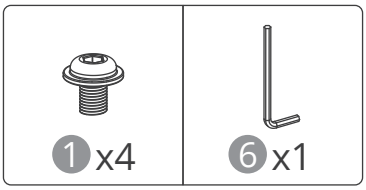

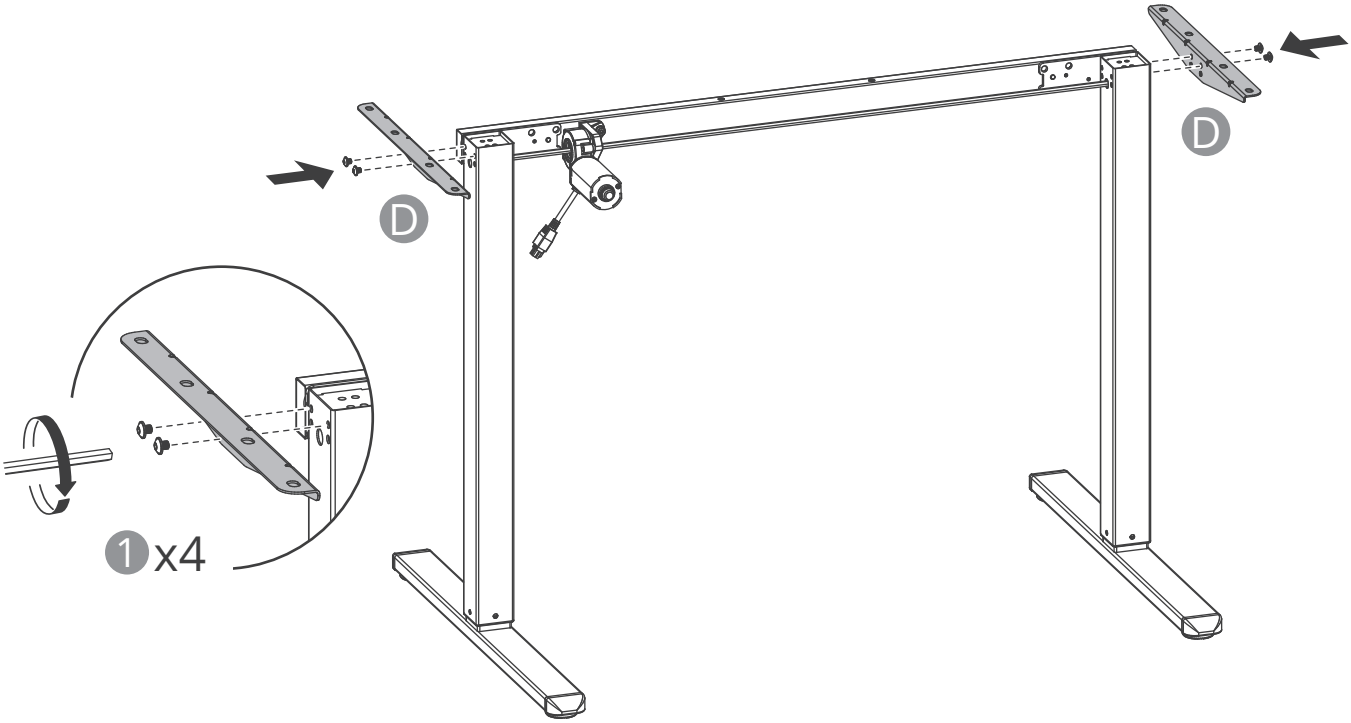

11

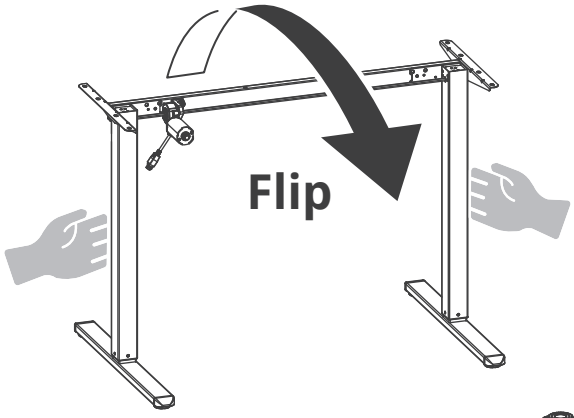

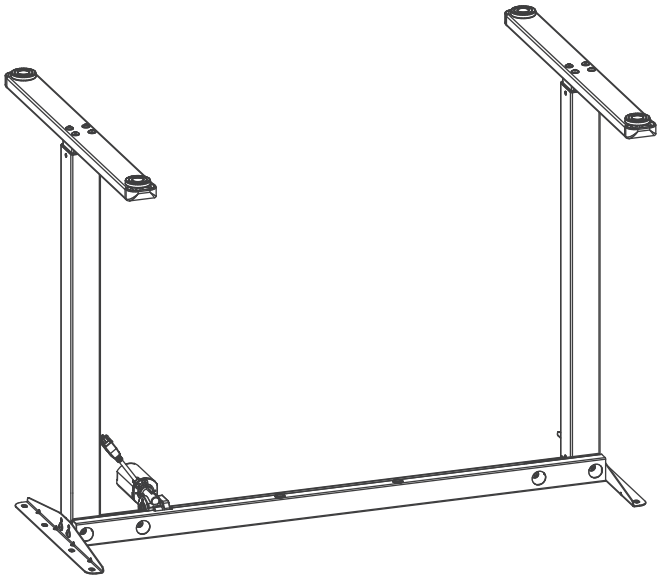

TEAM LIFT

We recommend two people assist with flipping to prevent crossbar deformation.

12

Ensure all holes are aligned before tightening the screws.
The recommended screw torque for locking the desktop is **6-10 N·m**; please keep the screws perpendicular to the mounting surface during installation. This will result in a flatter desktop.



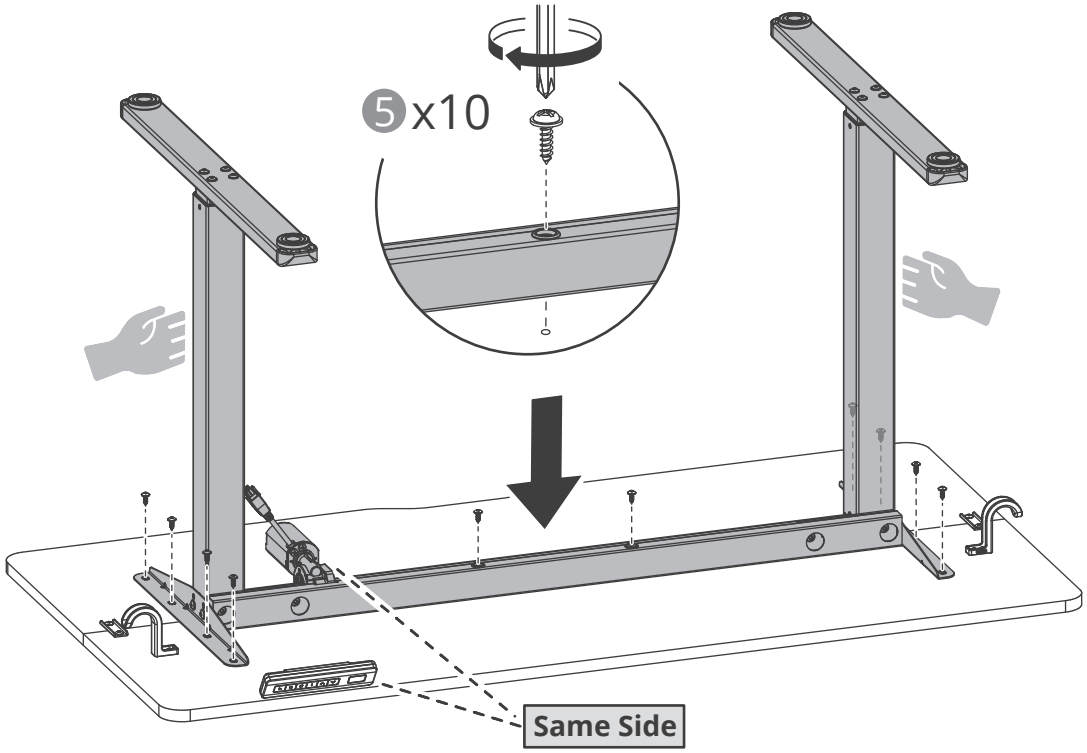

13

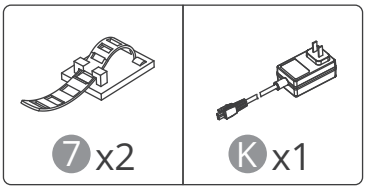

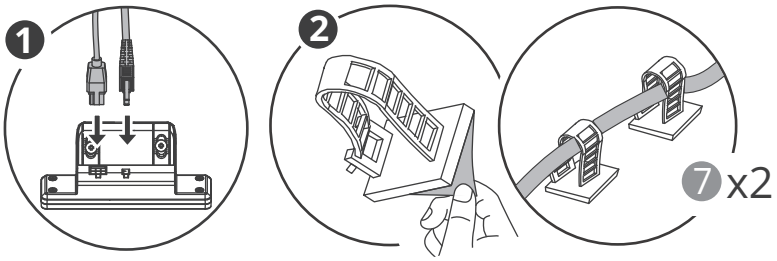

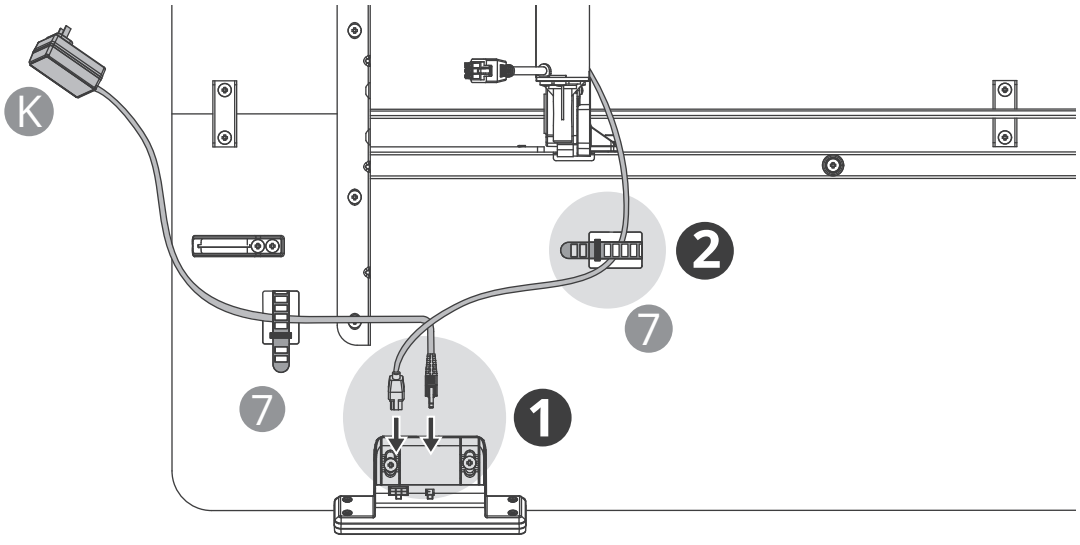

14

Note: Do not rest any weight on the keypad during the flip.



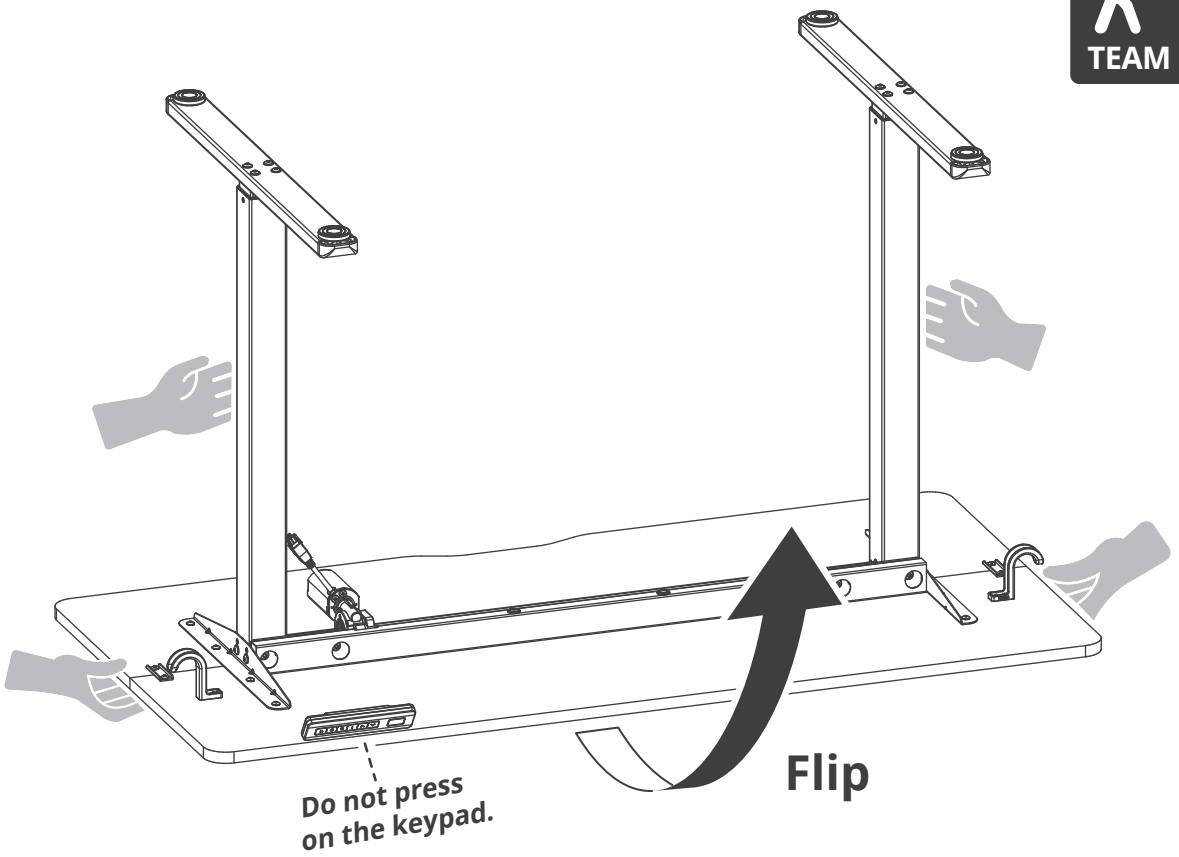

15

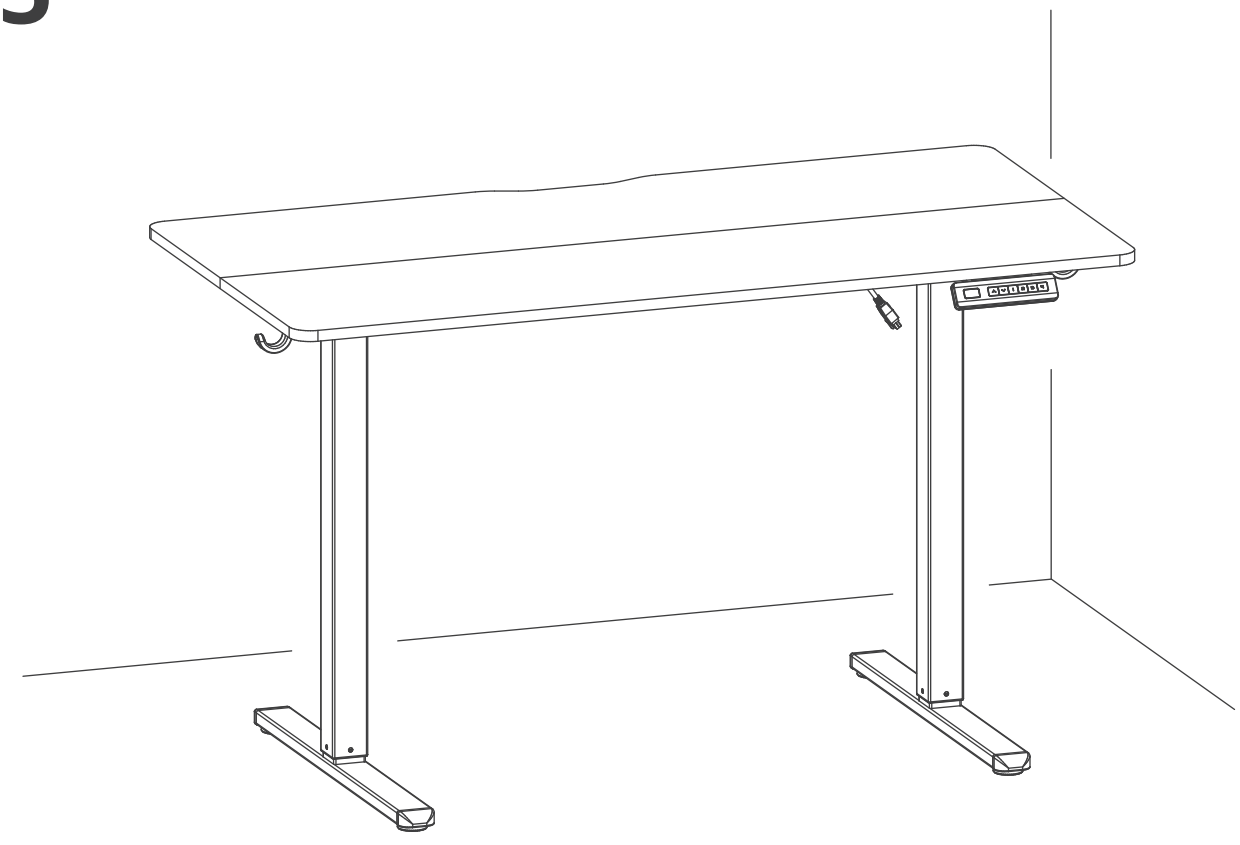

Keypad User Guide



Height Adjustment

Press and hold the ∧ or ∨ button to adjust the height.

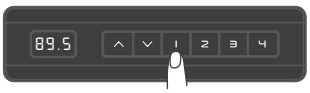

Memory Heights

1. Briefly press the memory button 1 / 2 / 3 / 4 . The desk will automatically move to the corresponding preset height.

2. Default memory key heights: Key 1 : 28.3 in (72/73 cm), Key 2 : 35.4 in (89/90 cm), Key 3 : 41.3 in (104/105 cm), Key 4 : 46.4 in (117/118 cm).



Memory Height Setting

Press and hold the ∧ or ∨ button to adjust the desk to the desired height. Press and hold the 1 / 2 / 3 / 4 button for 3 seconds until the numbers on the display start flashing, indicating that the current height has been successfully saved.

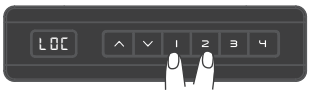

Child Lock

1. Lock: Simultaneously press and hold the 1 and 2 buttons for 3 seconds. When the display shows LOC the desk is locked and cannot be adjusted.

2. Unlock: Simultaneously press and hold the 1 and 2 buttons for 3 seconds. When the display changes from "Loc" to showing the desk height, the child lock is released.



Reset

1. Press and hold the ∨ to lower the desk to its lowest position, then release.

2. Press and hold the ∨ again for 5 seconds until the display shows RST .

3. Allow the desk to automatically complete the reset. Once finished, the display will show the current desk height.

Note: If the display shows an E07 or RST error code, press and hold the ∨ button for 3 seconds until RST appears. The desk will then automatically reset.

Setting Upper and Lower Height Limits

These limits prevent the desk from moving past your preferred minimum or maximum heights.

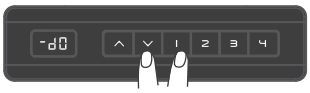

1. To set the lower limit: Adjust the desk to your desired minimum height. Press and hold ∨ and Button 1 simultaneously for 3 seconds. The screen will display -DP to confirm.

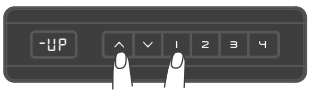

2. To set the upper limit: Adjust the desk to your desired maximum height. Press and hold ∧ and Button 1 simultaneously for 3 seconds. The screen will display -UP to confirm.

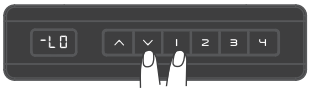

3. To cancel a limit: Move the desk to its current lowest position (display shows -LO or highest position (display shows -HI).
Hold the corresponding button combination (∨ + 1 or ∧ + 1) for 3 seconds until the display flashes to clear the setting.

Switching Display Units (CM/Inches)

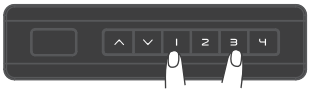

You can easily toggle how your desk height is displayed on the handset.

1. Press and hold Button 1 and Button 3 together for 3 seconds.

2. The display will switch between metric and imperial units.

3. Pro tip: Metric (CM) displays as a whole number. Imperial (Inches) includes a decimal point.

Adjusting Anti-Collision Sensitivity

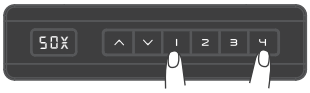

This safety feature ensures the desk rebounds if it hits an object while moving.

1. Press and hold Button 1 and Button 4 together for 3 seconds until the display flashes S0X .

2. Use the ∧ or ∨ to choose a sensitivity level:

- 1: Highly sensitive.
- 2: Standard sensitivity.
- 3: Low sensitivity.
- 0: Function disabled.

3. Once selected, press and hold Button 1 and Button 4 again for 3 seconds to save. The screen will return to the current height display after a brief pause.

Frequently Asked Questions (FAQ)

One-Sided Desk Lifting	**Possible Cause** The sync rod is not installed correctly. **Solution** Check if the sync rod is fully inserted into the leg column. If not, lower the desk to its lowest position and reinstall the sync rod referring to the leg installation sticker or the instruction manual. If the above steps do not solve the problem, please take a video of the issue and contact after-sales support at support@yfs.life.
Handset displays "E01"	**Possible Cause** The desk is overloaded (Motor is working too hard). **Solution** 1. Remove excess weight from the desktop. 2. Try adjusting the height again.

Handset Malfunction or No Response	**Possible Causes** 1. Power is not connected correctly. 2. Controller has poor contact or is malfunctioning. 3. Fuse is blown or the power module is faulty. **Solution** Disconnect all cable connections and reconnect them. Check if all cables are connected correctly and tightly. Make sure the power plug is inserted into the power outlet. If the above steps do not solve the problem, please take a video of the issue and contact after-sales support at support@yfs.life.
Desk Tilting or Unbalanced	**Possible Causes** 1. Improper installation causing imbalance. 2. One column or footpad is not level. **Solution** 1. Review the installation steps to ensure each column is correctly installed and the desk is level. 2. Adjust the footpad height to level the desk. 3. If unresolved, record a video of the issue and contact customer support at support@yfs.life.
Unusual Noise or Irregular Movement During Height Adjustment	**Possible Causes** 1. The desktop load exceeds the recommended limit (not more than 100 kg / 220 lbs). 2. Loose connections in the desk—especially near the sync rod. 3. The motor may be faulty. **Solution** 1. Check if the items on the desktop exceed the weight limit and reduce the load if necessary. 2. Inspect and tighten all screws and connectors to secure the desk structure. 3. If the issue persists after these steps, record a video of the problem and contact customer support at support@yfs.life.
Handset displays "RST"	**Possible Cause** Poor connection of the motor cable. **Solution** Verify that all cable connections are correct and secure, and then perform a reset. If the problem persists, please take a video of the issue and contact after-sales support at support@yfs.life.
Handset displays "HOT"	**Possible Cause** The desk has entered overheat protection mode. **Solution** Wait 20 minutes before operating the desk. If the problem persists, please take a video of the issue and contact after-sales support at support@yfs.life.

Handset displays "E07"	**Possible Cause** Connection lost to Motor (usually a loose cable). **Solution** 1. Firmly push in all cables connecting the motor to the control box. 2. ower the desk to the bottom, release, then hold ∨ for 5 seconds. When RST appears, wait for the desk to auto-reset and show the normal height.
Handset displays "E11"	**Possible Cause** Sensor glitch (the system thinks Motor is moving while the desk is still). **Solution** 1. Double-check that all cables are tightly connected. 2. Hold the ∨ button until the desk reaches its lowest point to reset it.
Handset displays "E12"	**Possible Cause** Not enough electrical power (Low Voltage). **Solution** 1. Ensure the power cord is firmly plugged in. 2. Plug the desk directly into a wall outlet rather than a crowded power strip.
Handset displays "H01"	**Possible Cause** Motors are temporarily overheated from too much frequent adjusting. **Solution** 1. Stop using the keypad to let the motors rest. 2. Wait 18–20 minutes; the error will disappear on its own.