ASSEMBLY INSTRUCTIONS

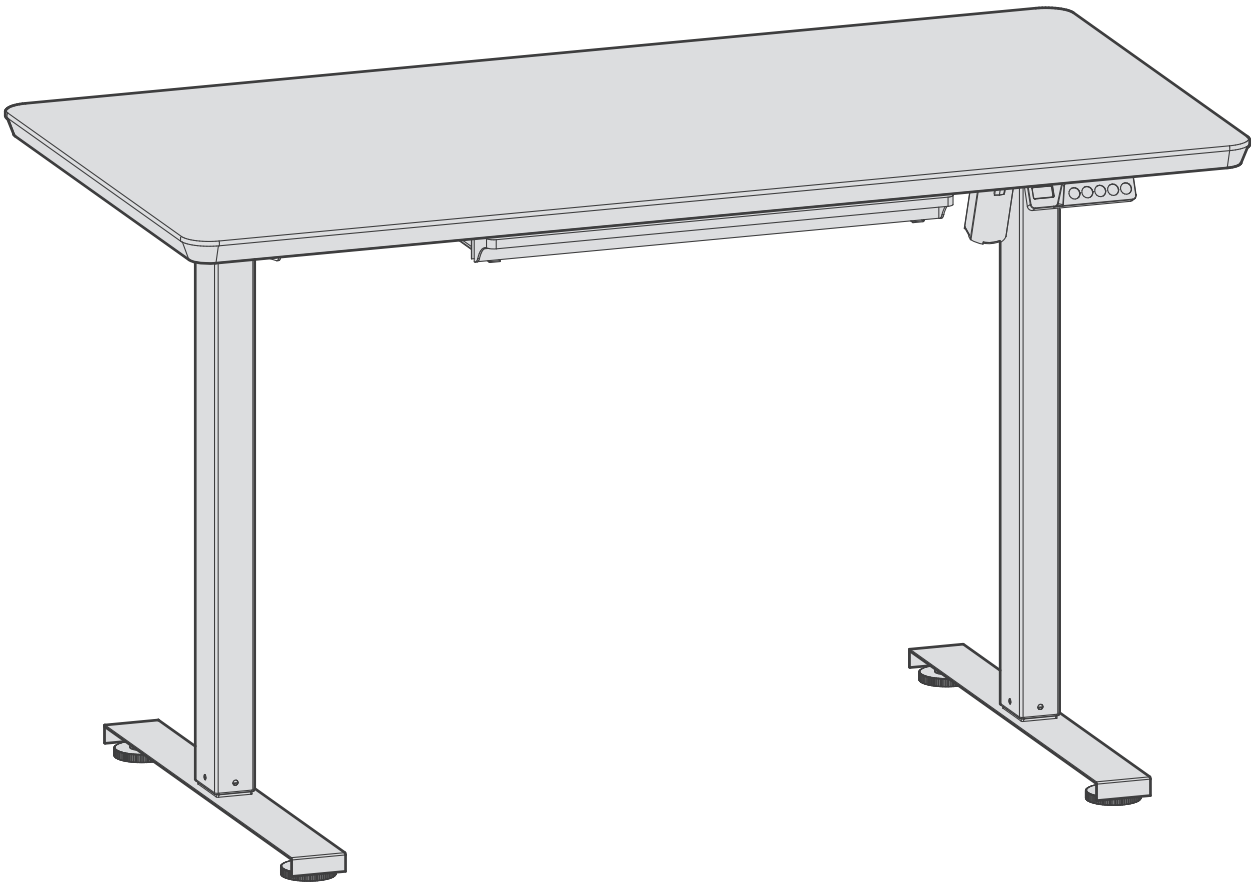

Scan QR code for installation video

support@yfs.life yfs.life/SDE0194-Z1

Caution

- Keep children and animals away from the desk during use. Ensure the desktop is not touching any walls.
- Remove obstacles taller than 20 "/51 cm from underneath the desk.
- Operate only in a working environment temperature of 32 °F -104 °F/0 °C - 40 °C.
- Keep product away from corrosive gases, liquids and dusty objects.
- Keep hands, feet and other body parts in a safe position during operation.Anti-collision is not automatically enabled when reset.
- The company does not bear any warranty or liability for damage and humaninjury caused by any abnormal or un-intended operation of the equipment.
- It is necessary to perform a manual reset after the initial installation or power cycling the equipment.

Pre-Installation Preparation

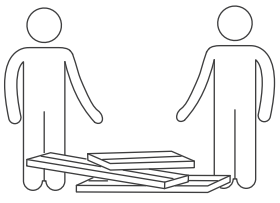		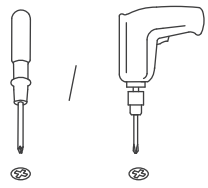	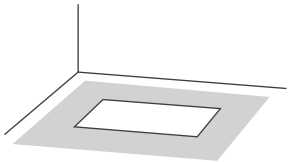
Complete through collaboration.	Assemble on a clean, flat, and protective surface.	Phillips screwdriver or drill required (not provided).	Allow an assembly area at least twice the desktop size.

PARTS LIST

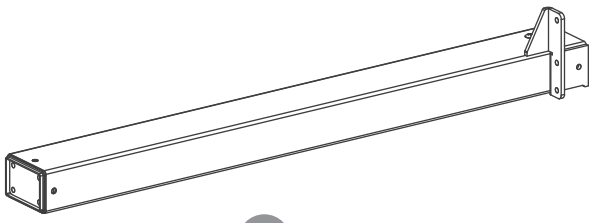

A x1

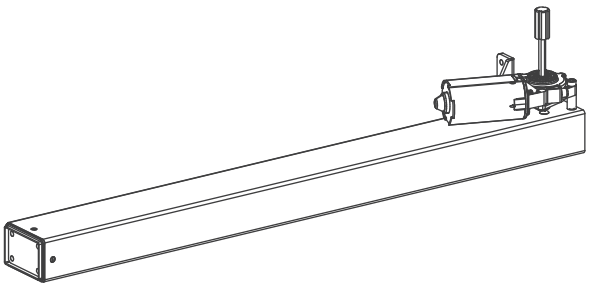

B x1

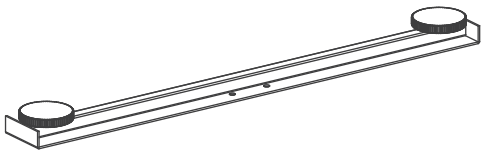

C x2

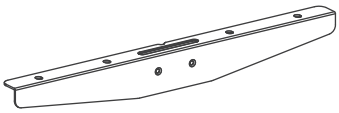

D x2

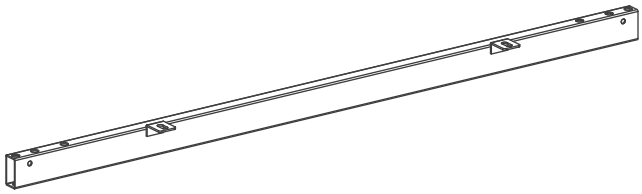

E x1

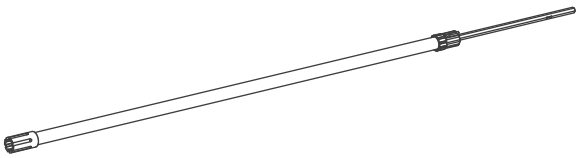

F x1

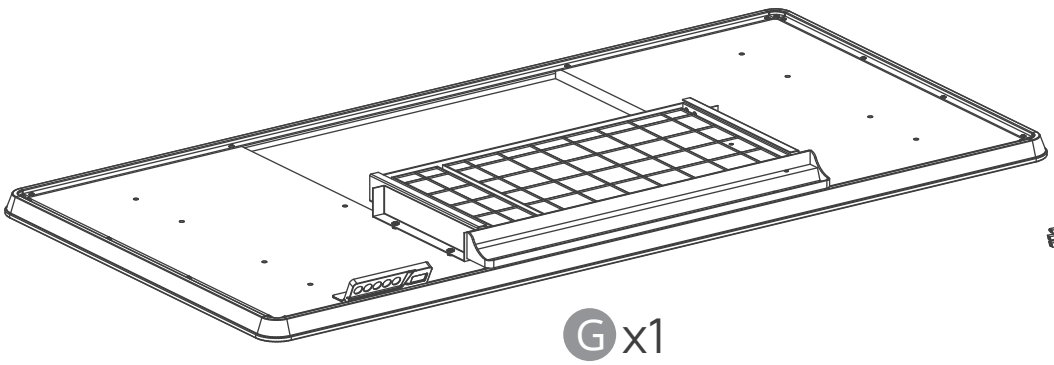

G x1

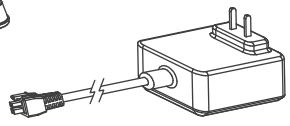

H x1

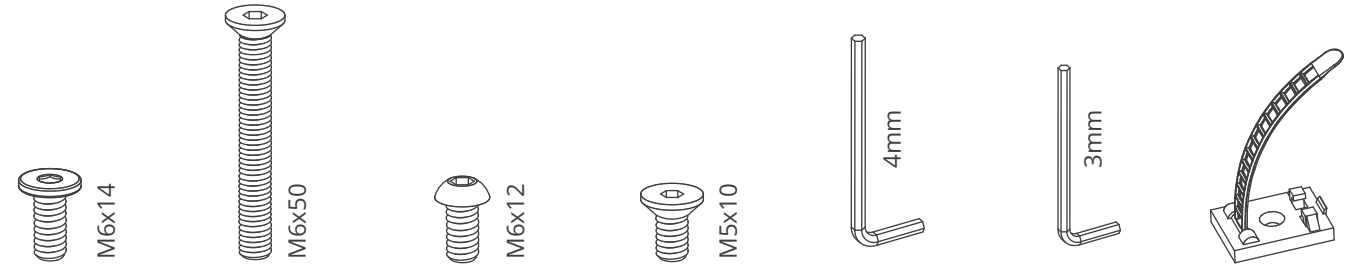

1 x10 2 x6 3 x10 4 x4 5 x1 6 x1 7 x3

EXPLODED VIEW DIAGRAM

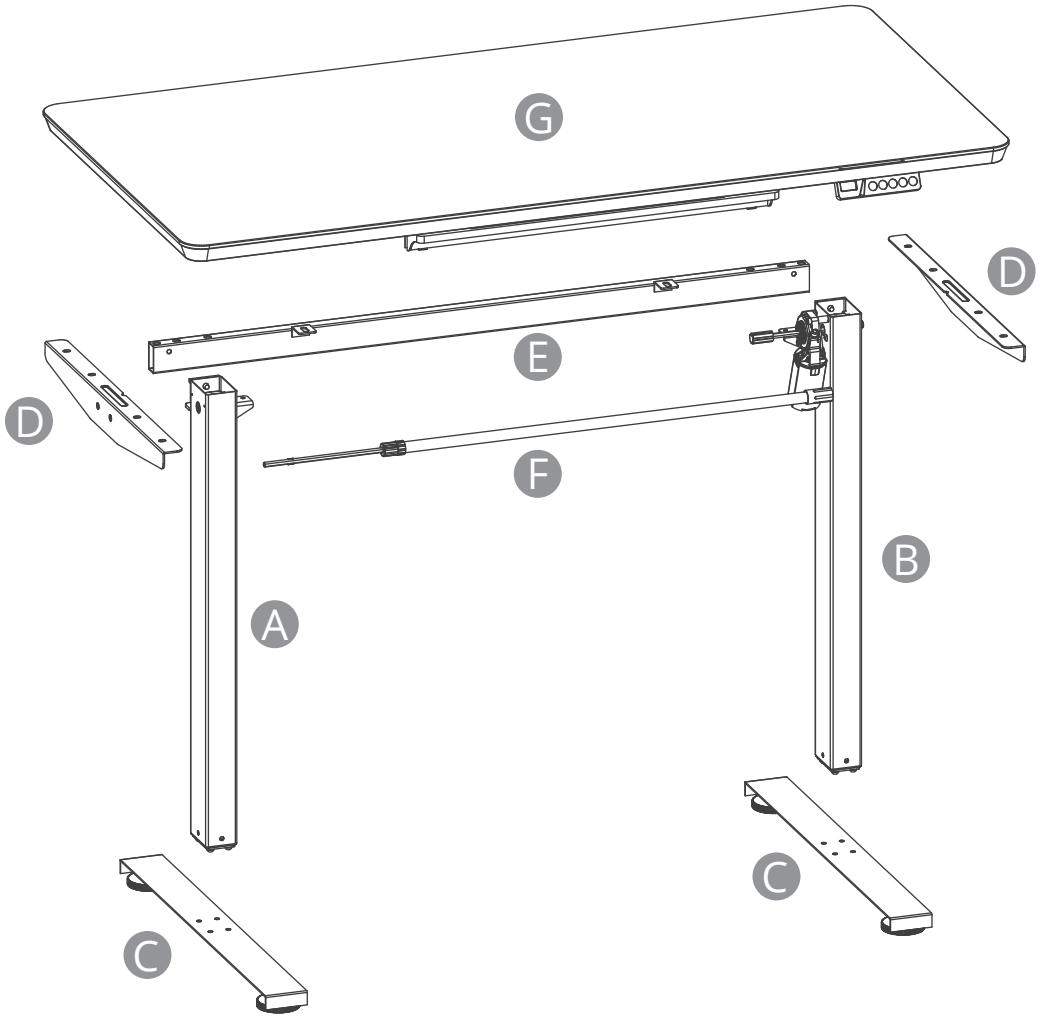

1

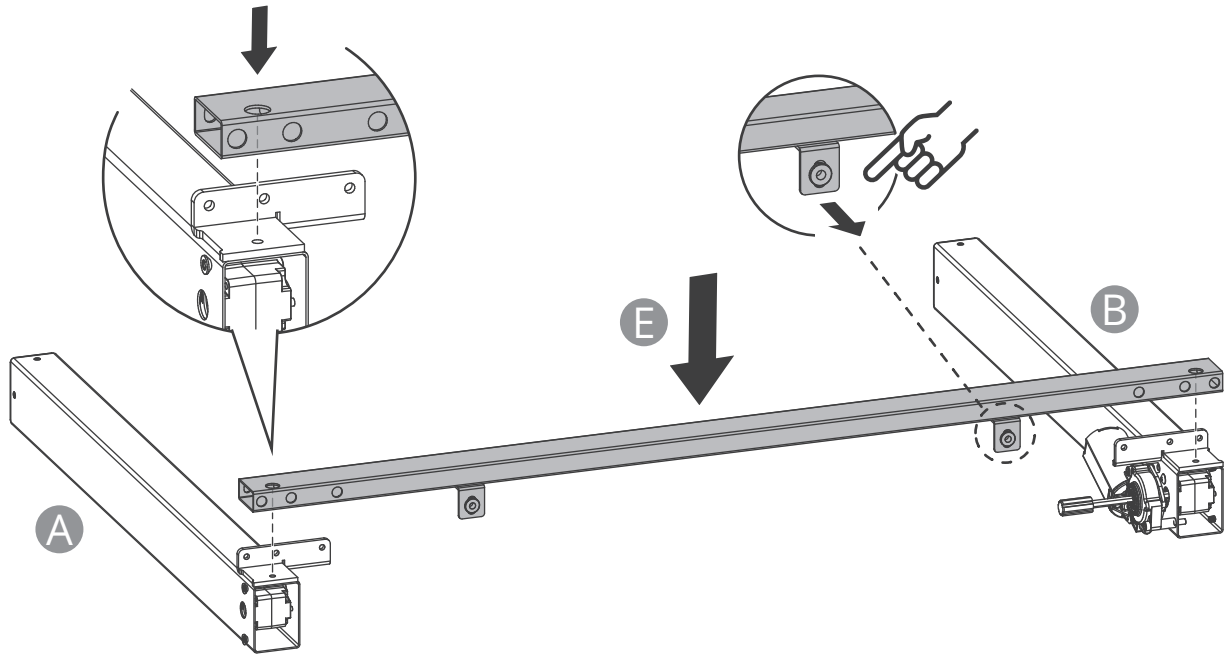

2

Frame Stability: Tighten frame screws to **15 N·m**. Full tightness is essential for a stable standing experience.

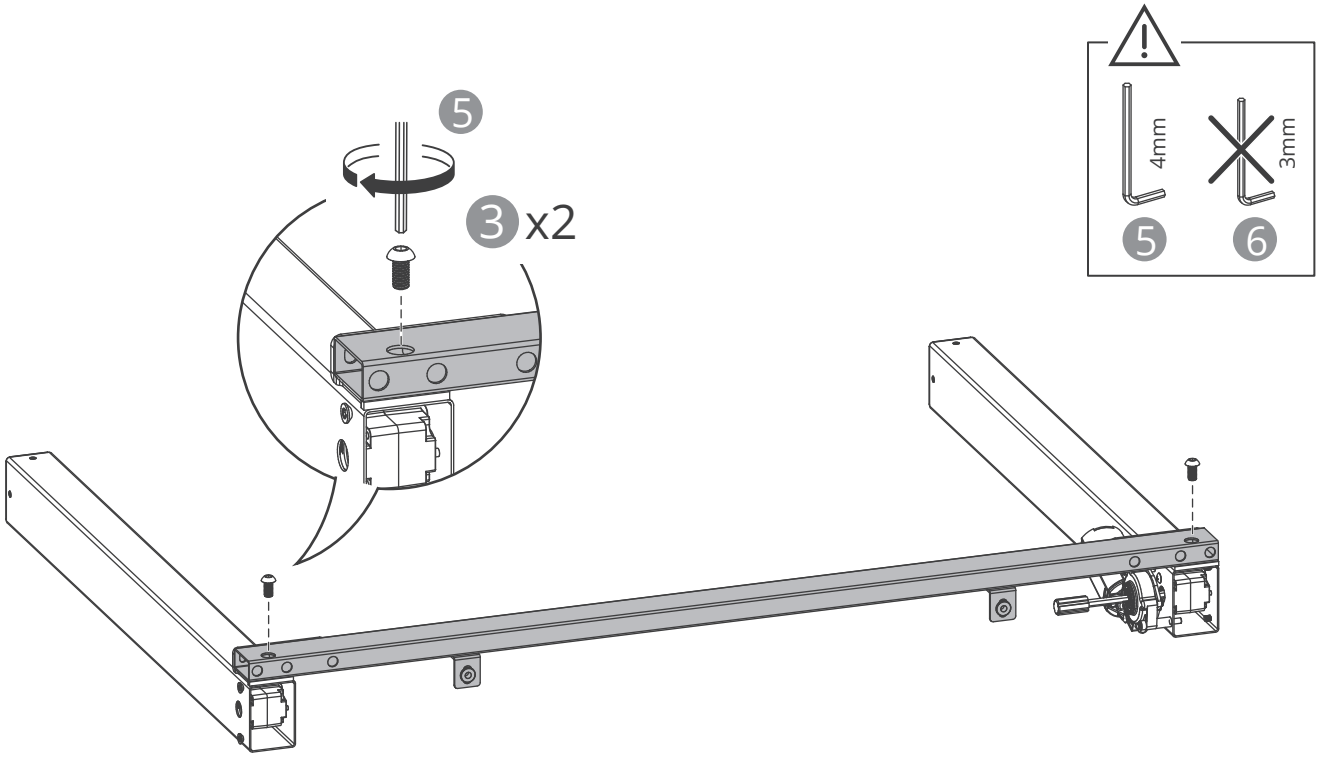

3

Frame Stability: Tighten frame screws to **15 N·m**. Full tightness is essential for a stable standing experience.

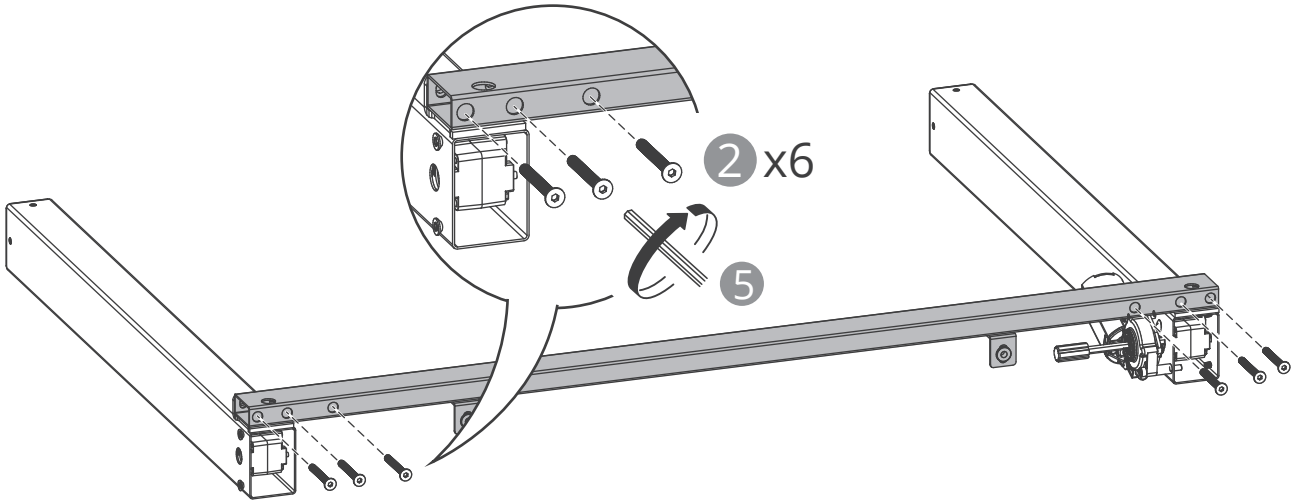

TEAM LIFT

We recommend two people assist with flipping to prevent crossbar deformation.

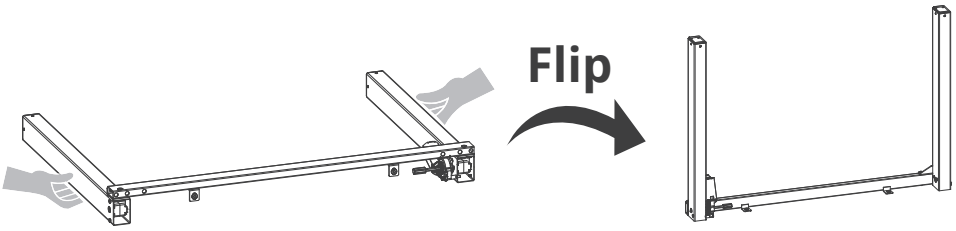

4

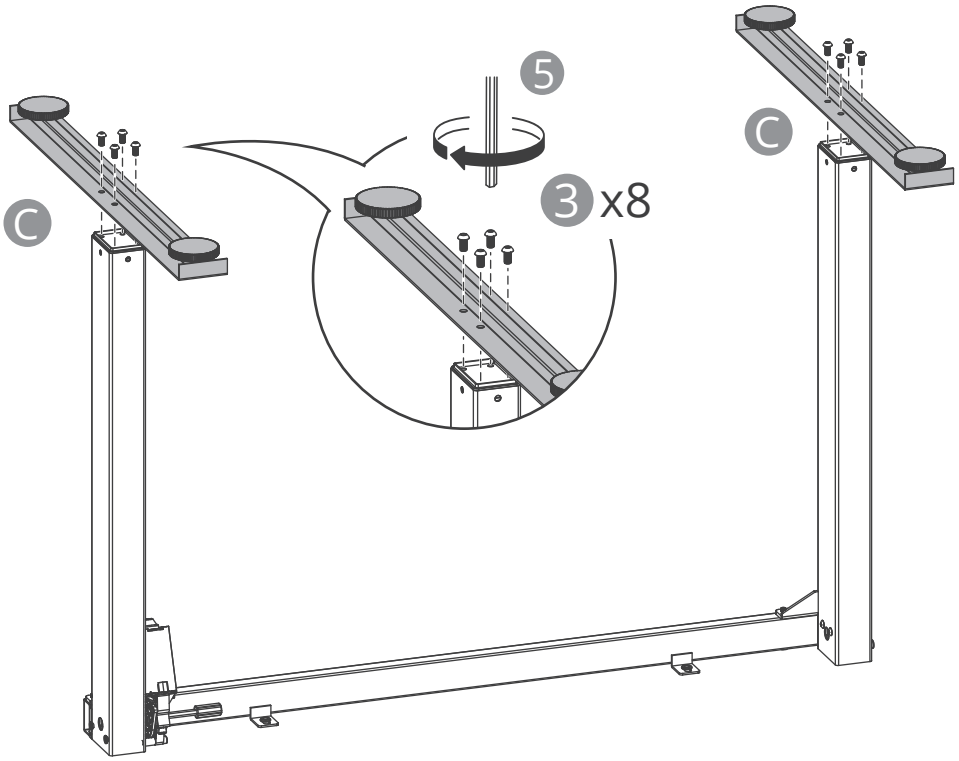

5

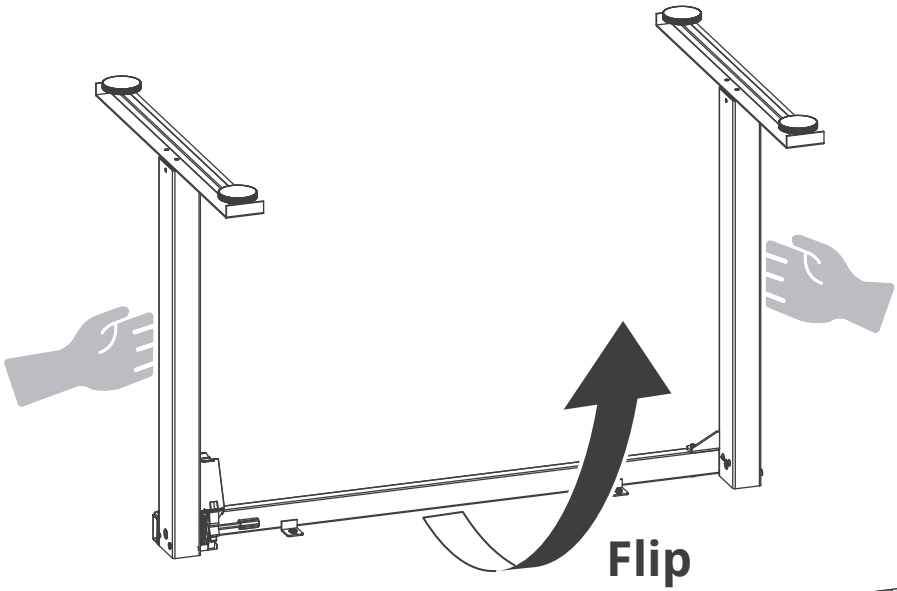

TEAM LIFT

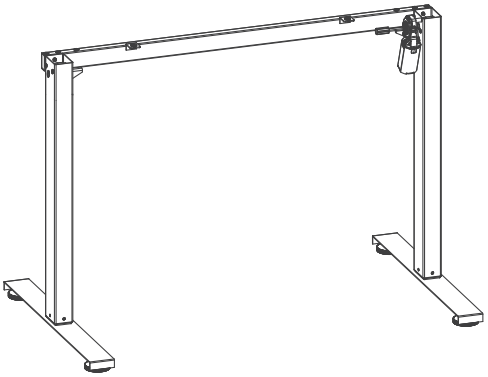

6

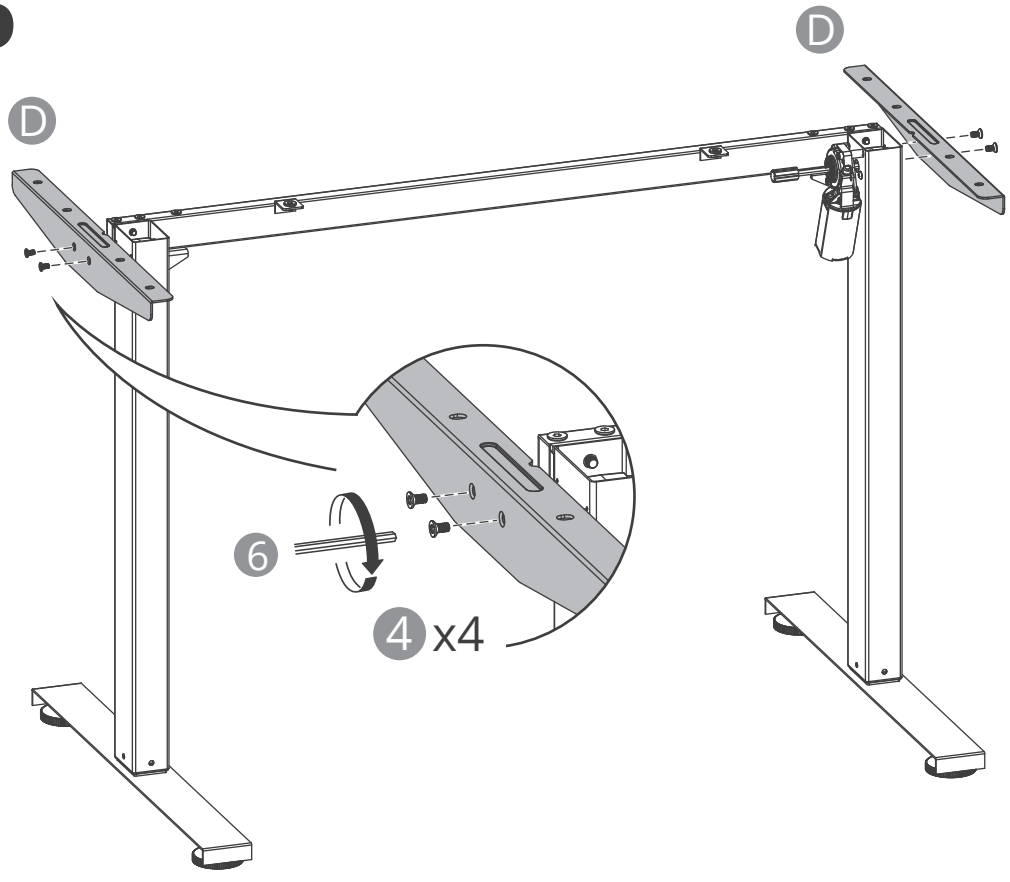

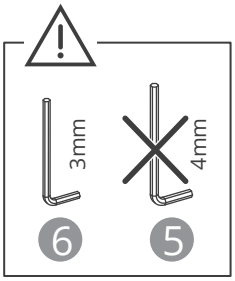

7

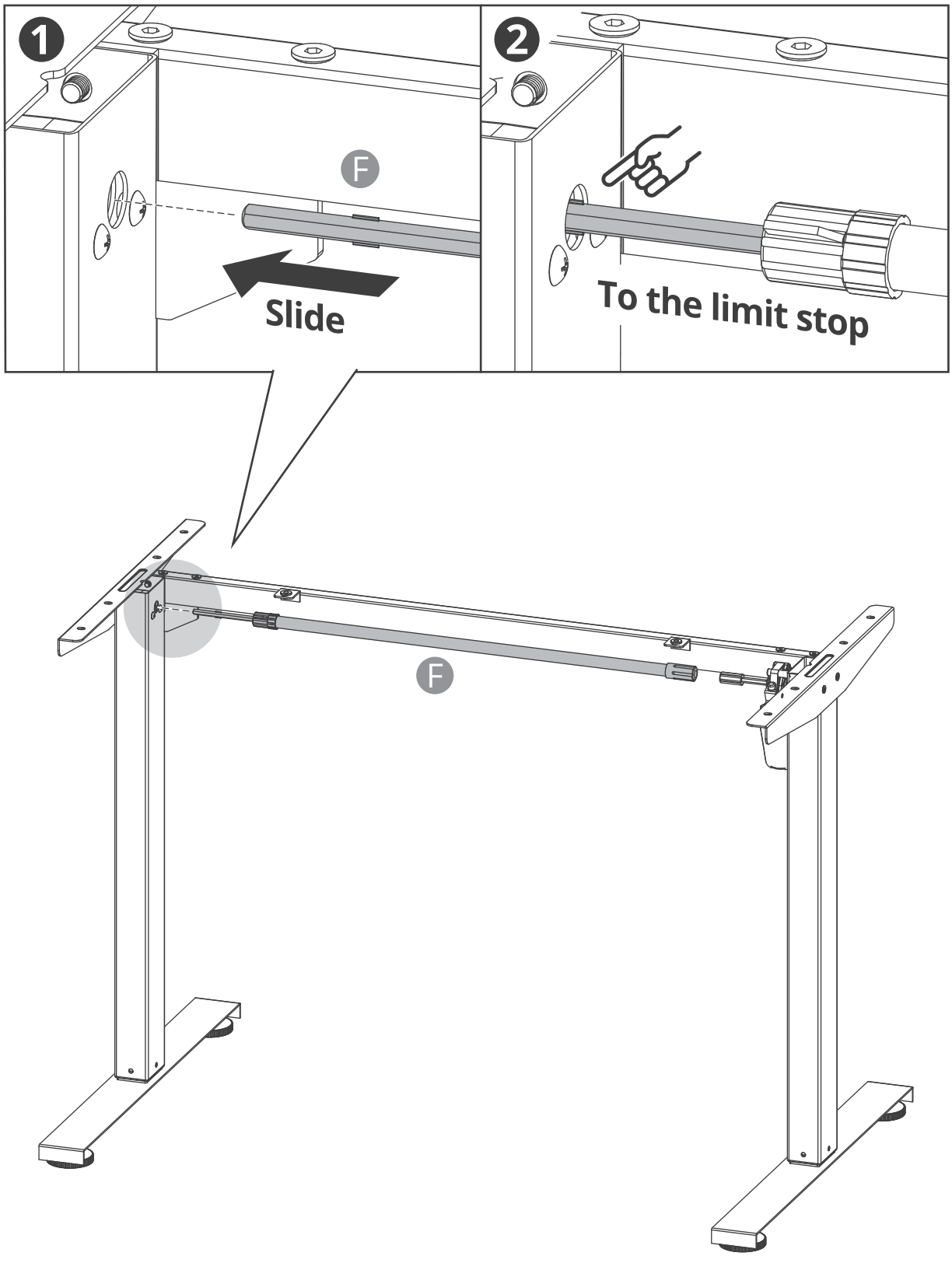

Leveling Adjustment for the Legs

1 **Ensure both legs are at the same height.**

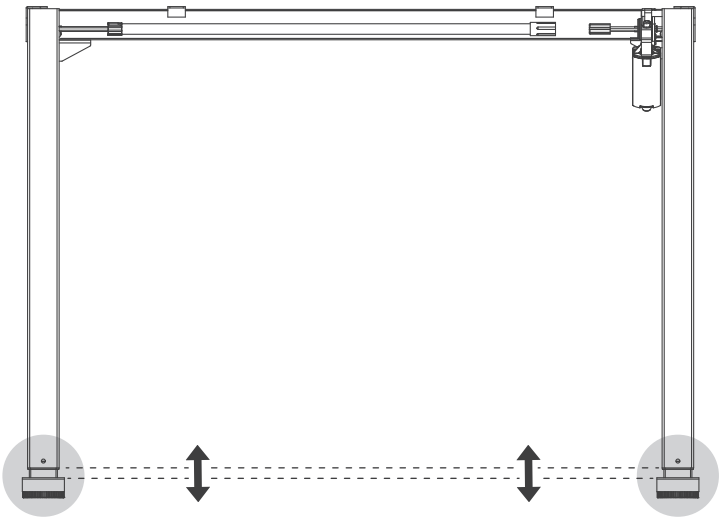

The gaps shown here must be identical, indicating horizontal alignment.

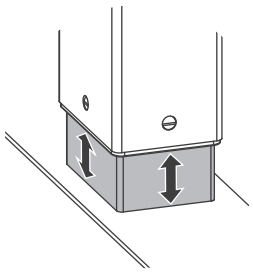

2 **Adjustment Procedure.**

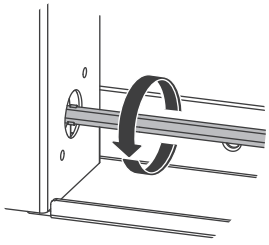

If the leg heights differ, **rotate the transmission rod clockwise** to align them.

Uneven Height

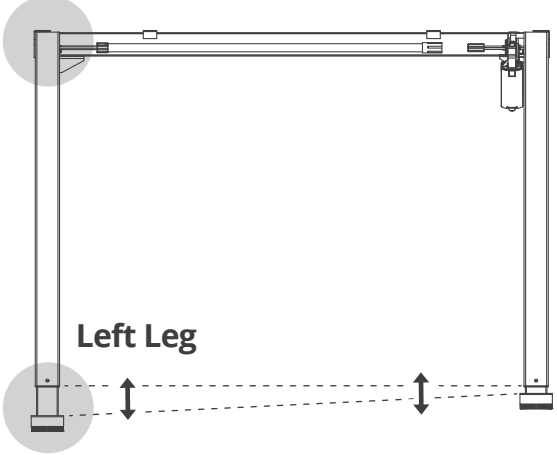

Level Aligned

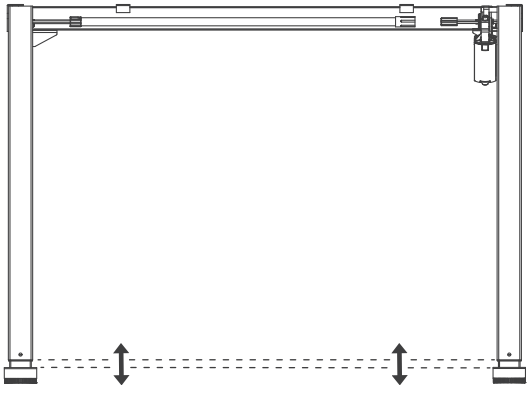

8

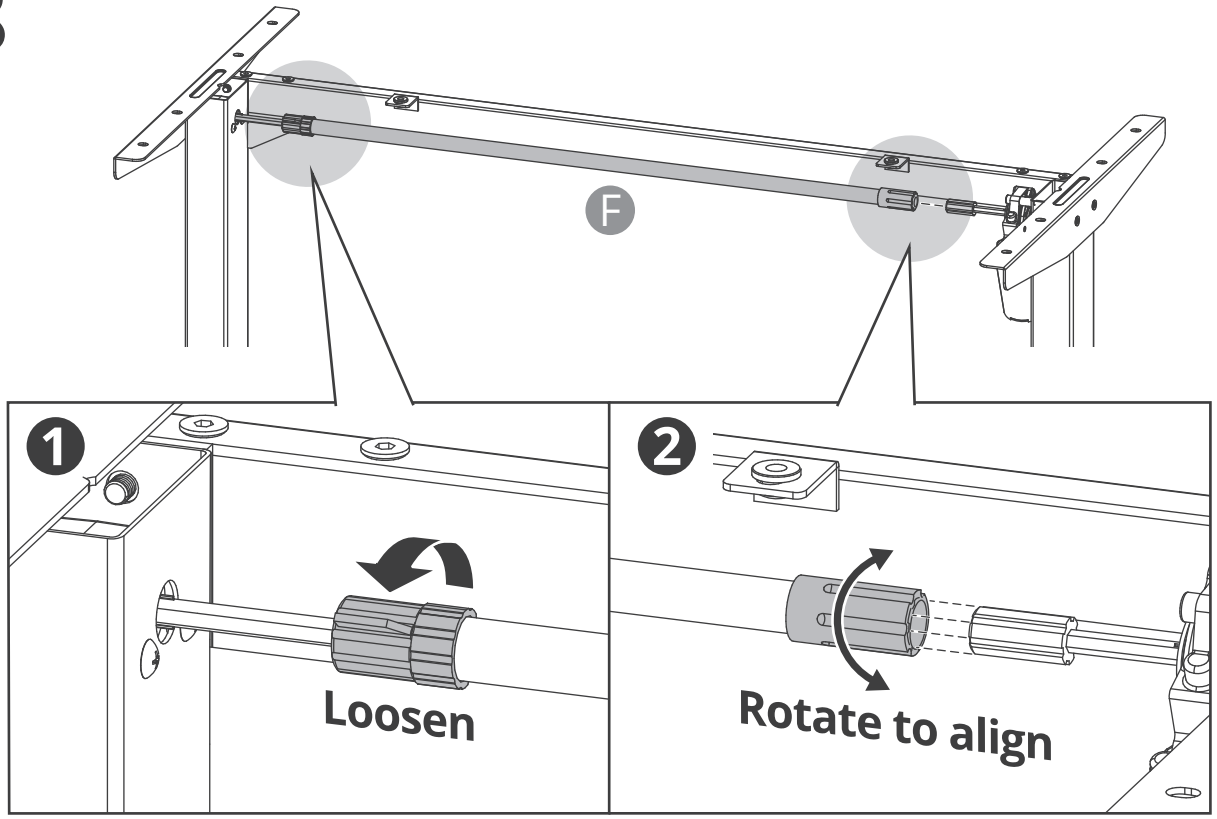

9

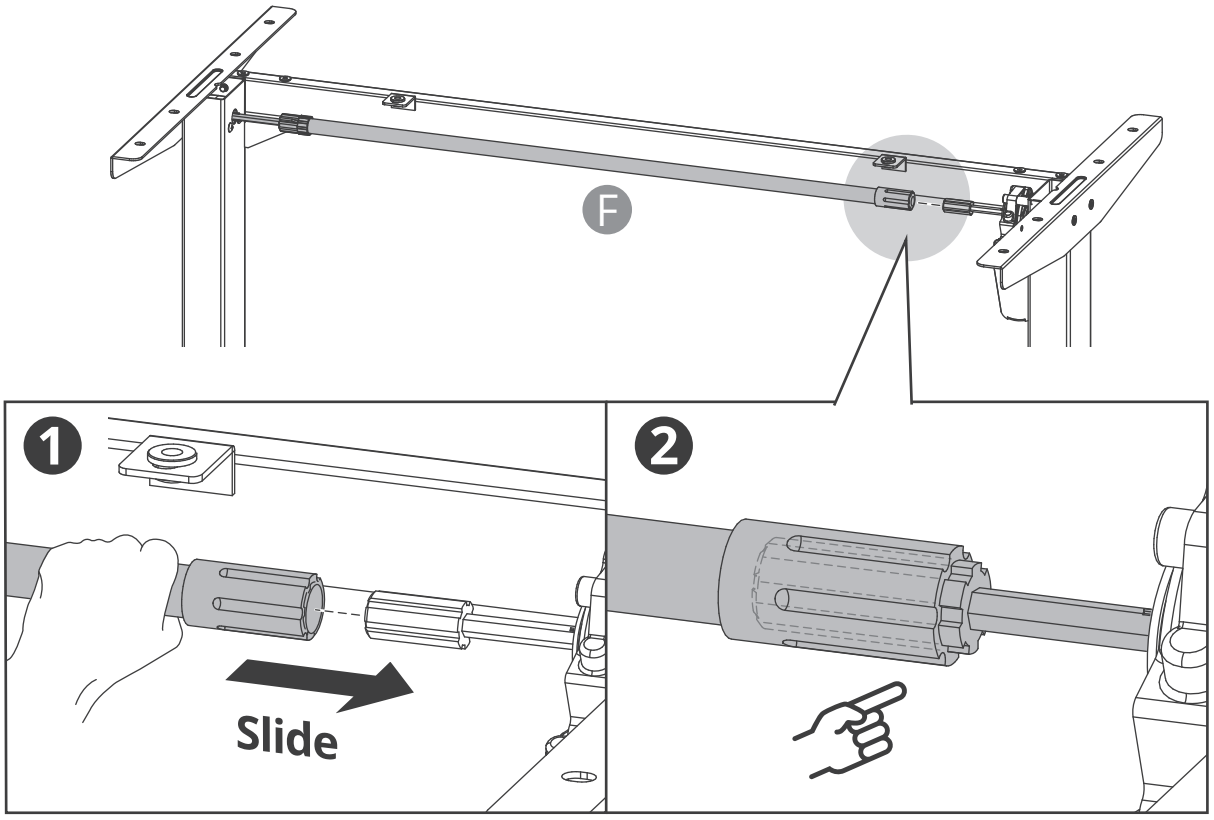

10

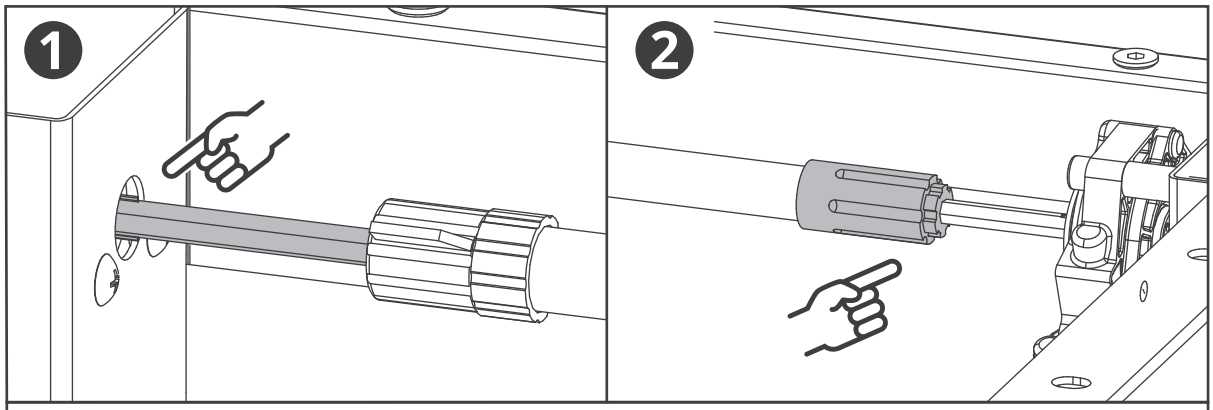

3 Ensure both ends of the sync rod are correctly positioned and fully engaged before tightening the locking sleeves.

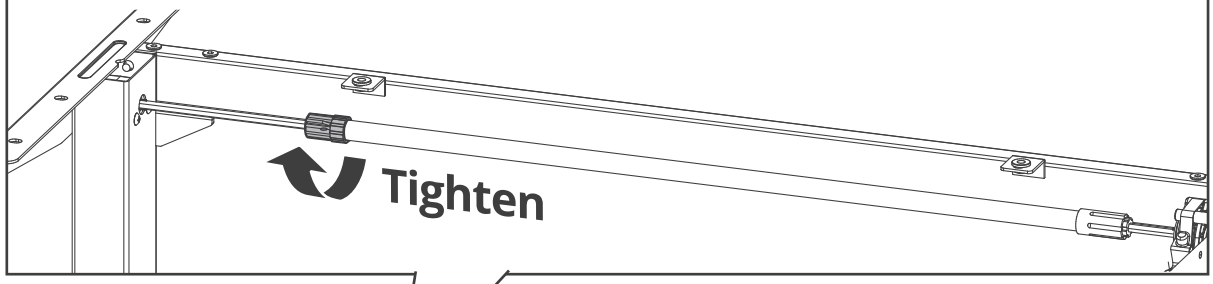

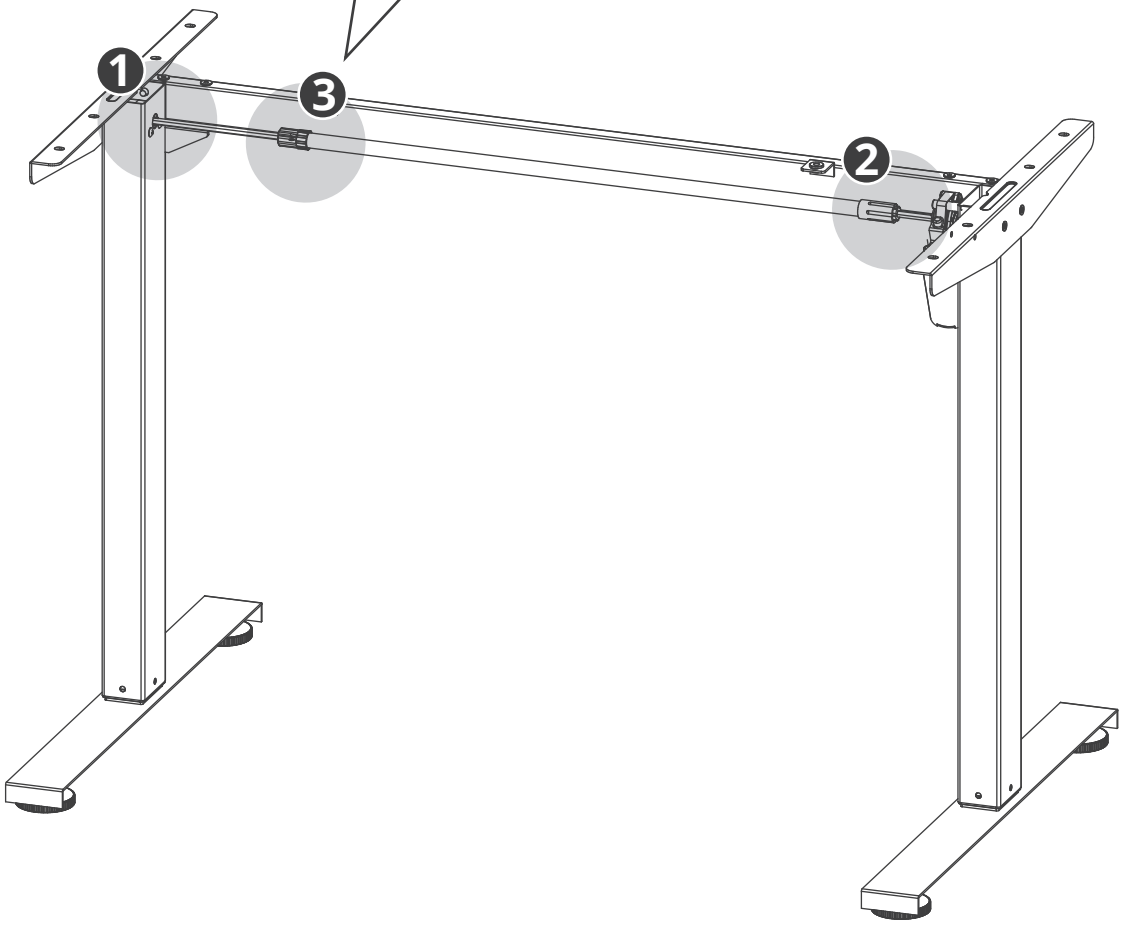

11

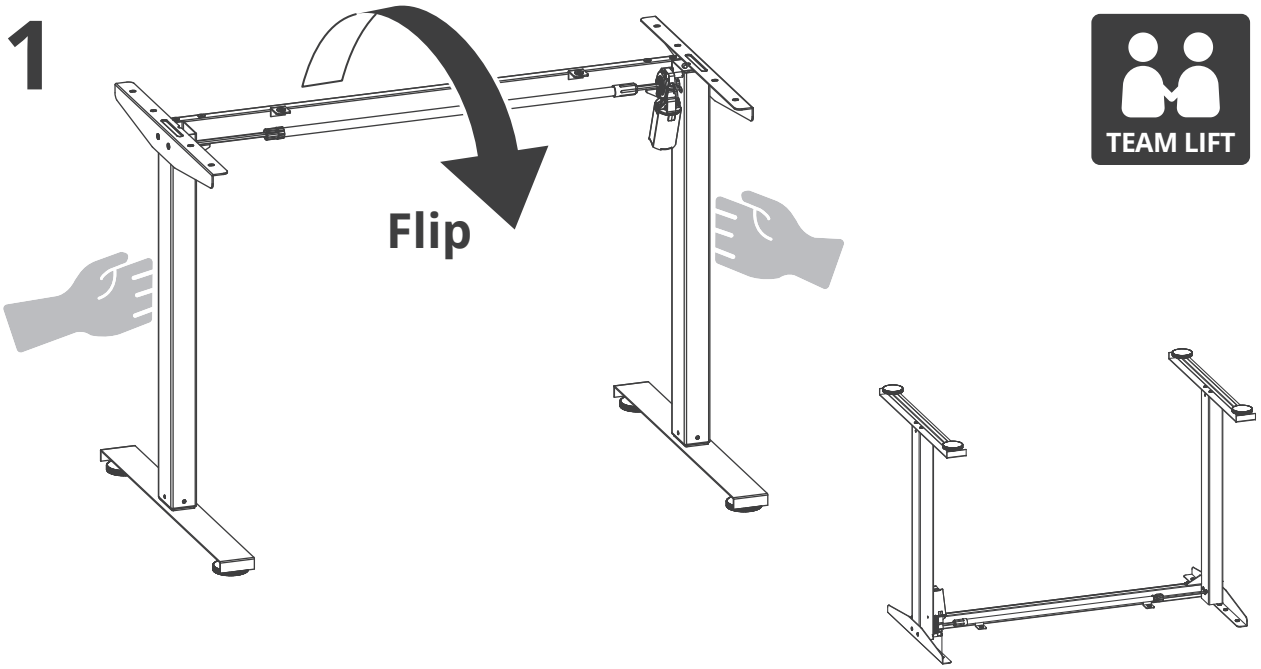

12

Desktop Attachment: Drive screws vertically to **6–10 N·m**.

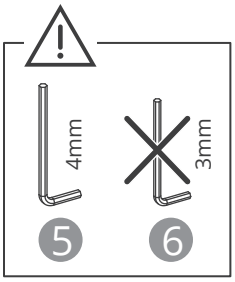

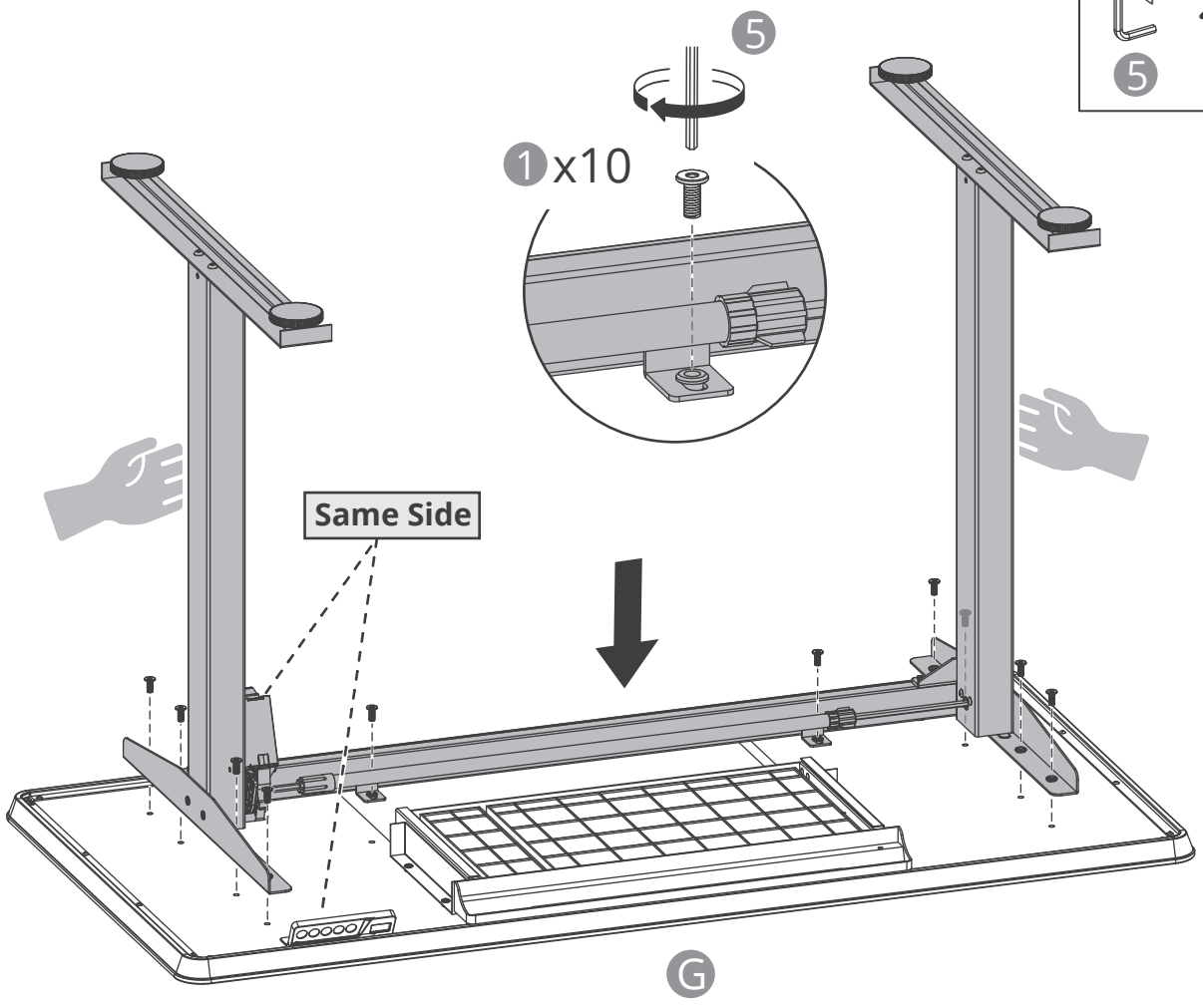

13

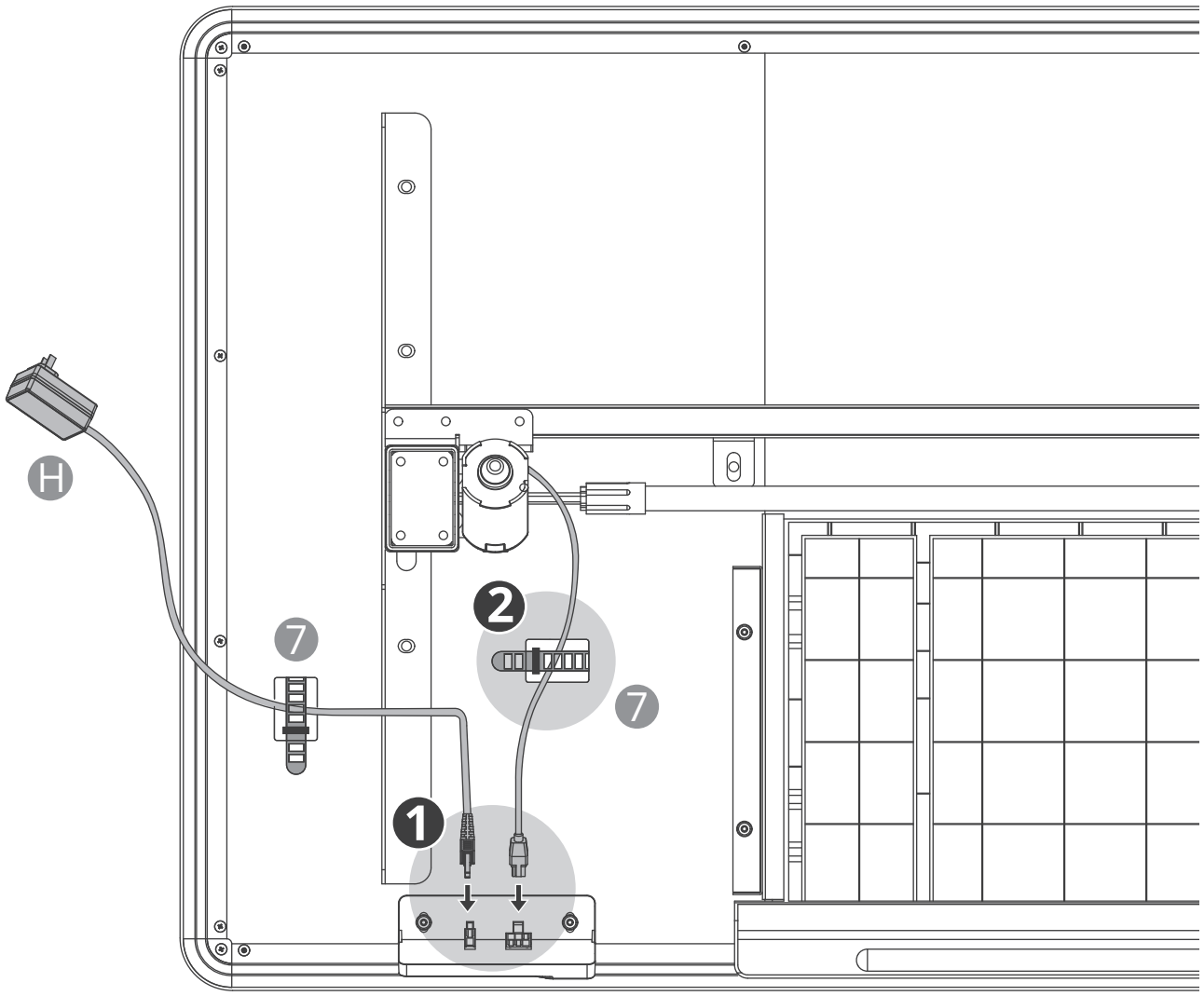

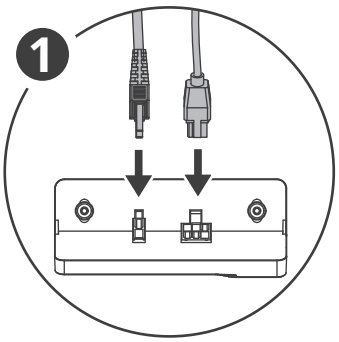

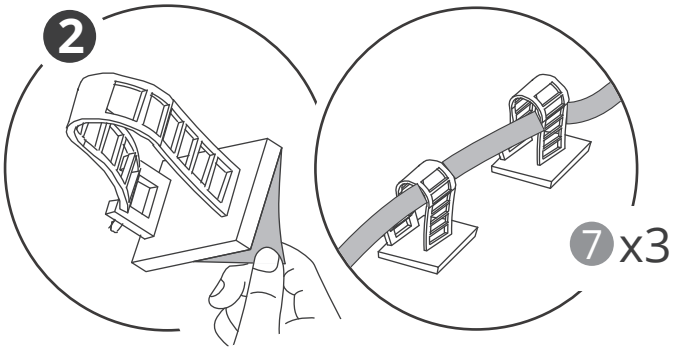

14

Note: Please ensure all screws are securely tightened before flipping the desk upright.

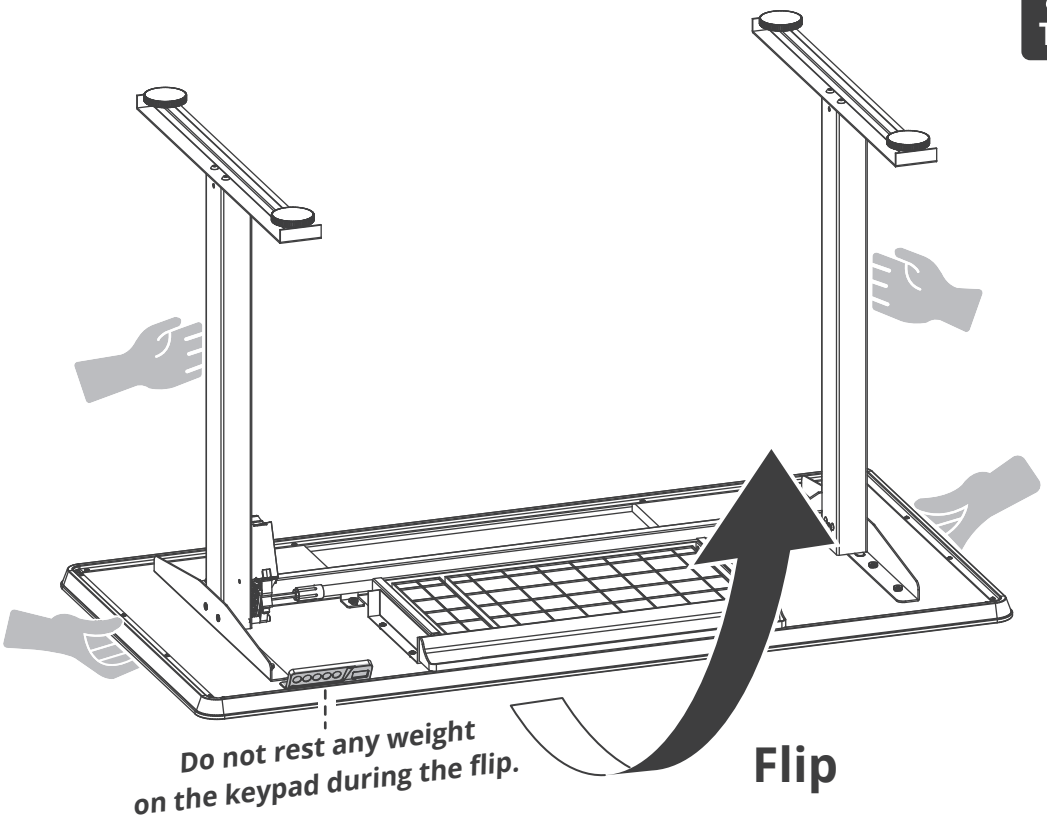

15

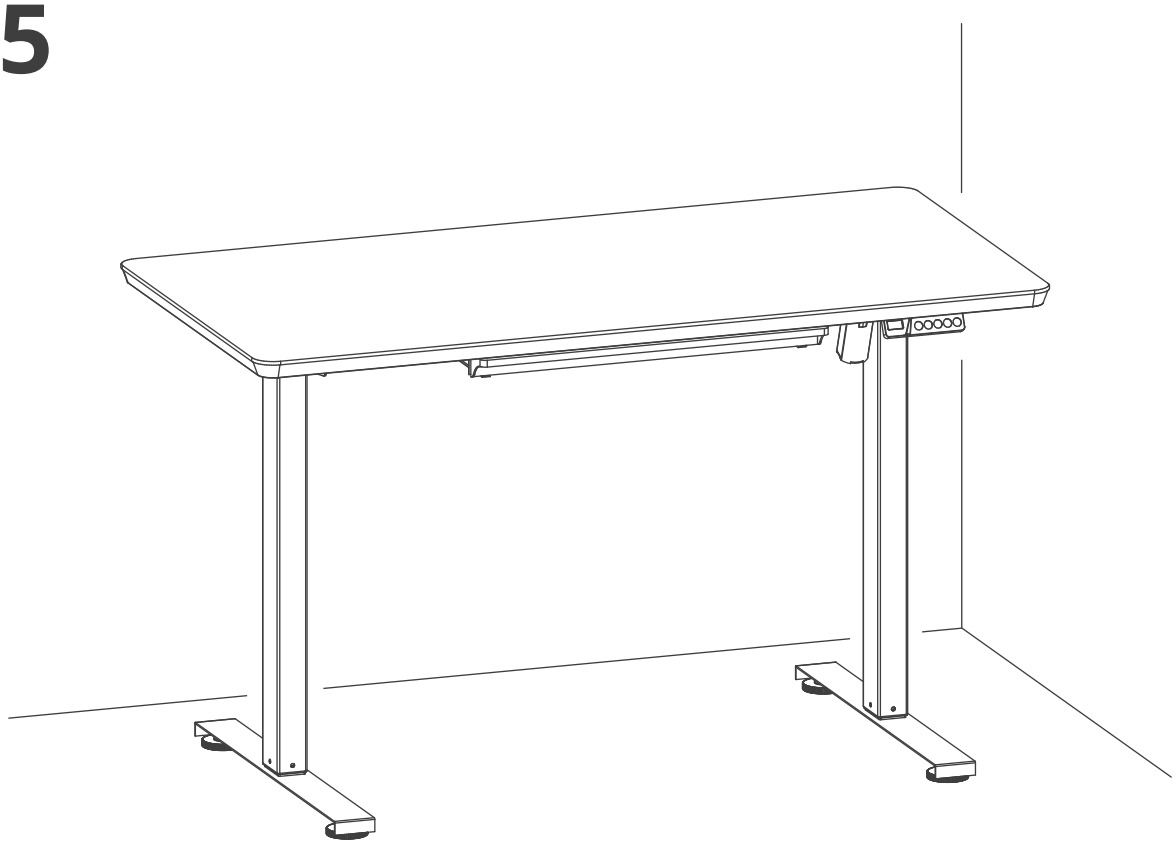

Keypad Functions and Operations

Initial Power-On

When powered on for the first time, the handset will display the current height.

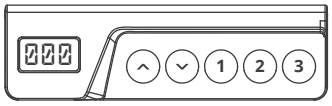

- If the displayed height matches the actual height of the desk, you may use it according to the factory presets directly.

- If the displayed height does not match the actual height, or if the desk height has changed after re-assembly, you must perform the Reset Operation.

Reset Operation

Follow these steps to reset the system:

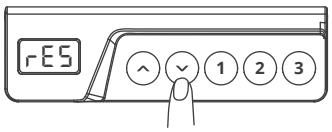

1. Press and hold the ⌄ button. Continue holding until the desk reaches its lowest position and stops.
2. Keep holding for another 5 seconds until the handset displays rES.
3. The reset process will begin: the desk will slowly descend to the absolute mechanical bottom and then rebound approximately 0.5 cm.
4. Once this rebound occurs, the reset is complete.

- Note: If you release the button during the process, the reset will pause. Press and hold again to continue.

Memory Position Settings

The system can save height positions internally (saved even after power loss).

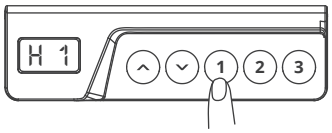

Setting a Memory Position:

- Adjust the desk to your desired height.
- Long press memory button ①, ②, or ③ for 3 seconds.
- The screen will display H1, H2, or H3 respectively for 2 seconds to confirm the setting is successful.

Setting a Memory Position:

- Press the memory button ①, ②, or ③. The screen will display the "target height" for 1 second, then switch to displaying the real-time height as the desk moves.
- The desk will stop automatically when it reaches the target.
- Pressing any button (or combination of buttons) during movement will stop the desk.

Memory Logic:

- Button ① corresponds to the lowest height.
- Button ② corresponds to a height of 860 (mm).
- Button ③ corresponds to the highest height.

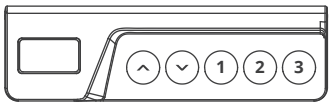

Wake-Up Function (Instant Operation)

When the handset screen is off (sleep mode), short-pressing any memory button (① ② ③) will light up the screen and immediately run the command. There is no need to press the button a second time to wake it first.

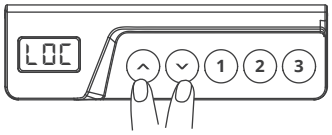

Child Lock

- To Lock: Press and hold both the ^ and v buttons simultaneously for 3 seconds. The handset will display LOC. The system is now locked and height cannot be adjusted.

- To Unlock: While in the locked state, press and hold both the ^ and v buttons simultaneously for 3 seconds. The display will change from LOC back to a number, indicating the system is unlocked.

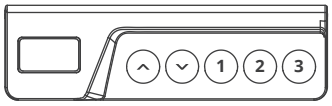

Energy Saving Mode

If no buttons are pressed for 30 seconds, the system enters Energy Saving Mode. The handset display will turn off, and the controller will enter a low-power state. Pressing any key will exit Energy Saving Mode.

Error Codes and Troubleshooting

Code	Diagnosis	Solutions
Handset displays "E31/E32"	Main power supply voltage abnormal.	Replace the main power supply.
Handset displays "E02"	Obstacle encountered (Anti-collision/Rebound).	Remove the obstacle blocking the desk's path.
Handset displays "Hot"	Overheat Protection: Continuous operation for 5 minutes with stop intervals of less than 10 seconds.	Wait 15 minutes for the "Hot" code to disappear, or disconnect the power and restart the system.
Handset displays "E10"	Motor cable not connected.	Check the motor connection cable to ensure it is securely plugged in.
Handset displays "E20"	Overload Protection (Too much weight).	**If moving UP:** Remove weight from the desktop, then operate again. **If moving DOWN:** Disconnect power, remove some weight from the desktop, and then reconnect power.

If issue not resolved, please record a video of the problem and contact support@yfs.life